Excellence since 1976

san jamar®
smart. safe. sanitary.

EZ-Fit® Cup Dispenser Gaskets

SMALL GROUPING OF HOLES ON EDGE
INDICATE GASKET SIZE (SEE CHART)

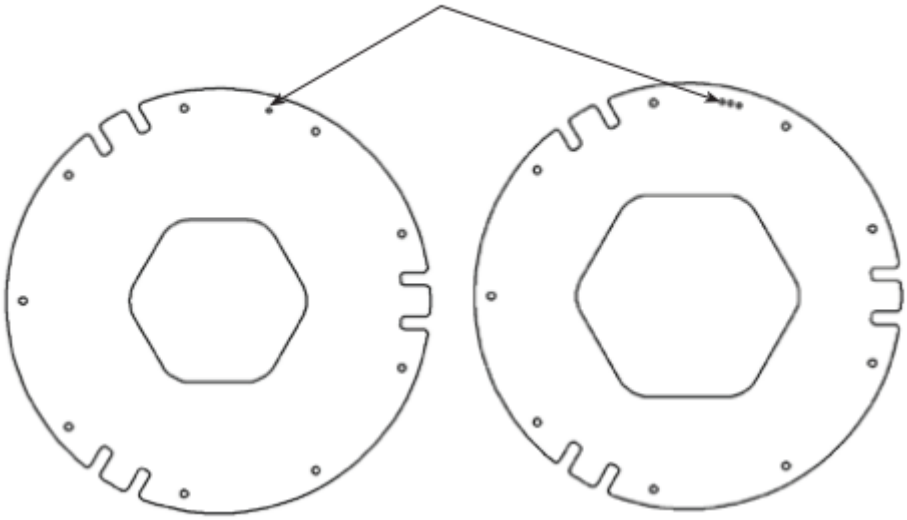

To suit the C2210CBKFSM SAN JAMAR EZY FIT CUP DISPENSER W/- CHROME RING WITH BLACK GASKETS SUIT CUP RIM DIA 73-98mm

No of holes	Inventory Code	Description	Per Pack
1	C2222SBKDS	Gasket, Black, SMALL	3
2	C2222MBKDS	Gasket, Black, MEDIUM	3
3	C2222LBKDS	Gasket, Black, LARGE	3
4	C2222XLBKDS	Gasket, Black, EXTRA LARGE	3
	100666XCDS	CHROME RING	1

To suit the C2410CBKFSM SAN JAMAR EZY FIT CUP DISPENSER W/- CHROME RING WITH BLACK GASKETS SUIT CUP RIM DIA 73-121mm

No of holes	Inventory Code	Description	Per Pack
1	C2422SBKDS	Gasket, Black, SMALL	3
2	C2422MBKDS	Gasket, Black, MEDIUM	3
3	C2422LBKDS	Gasket, Black, LARGE	3
4	C2422XLBKDS	Gasket, Black, EXTRA LARGE	3
	100671XCDS	CHROME RING	1