Trade Waste Solutions

100% STAINLESS STEEL LEAD FREE

CHEFS DEPOT Culinary Supplies

Tundish with Extended Front Sleeve

5 YEAR WARRANTY

CS-TUND-M

- 304 grade stainless steel
- Clear perspex front for easy inspection
- Easily removed face plate
- Extended sleeve allows face plate to extend outward up to 40mm
- Pre-drilled fixing wings
- Custom made products incur a lead time

Front

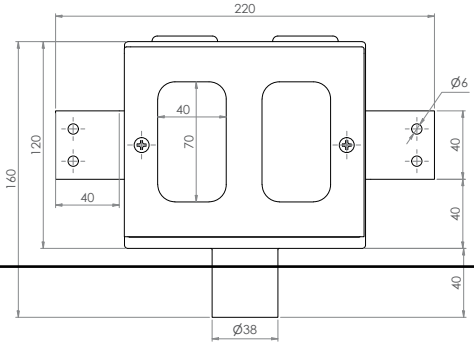





Top

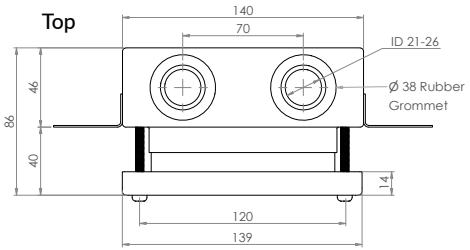

Cross Section

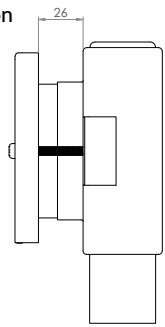

CS-TFP - Replacement Front plate available