Trade Waste Solutions

WMTS040
23097

100% STAINLESS STEEL LEAD FREE

CHEFS DEPOT
Culinary Supplies

150mm Round Clear Out

5 YEAR WARRANTY

FW-150CO-304
FW-150CO-316

- 3mm thick removable top
- Suit tiled floor application
- Push fit o-ring seal
- 304 or 316 grade stainless steel
- Suits 100mm DWV, HDPE pipe

Top

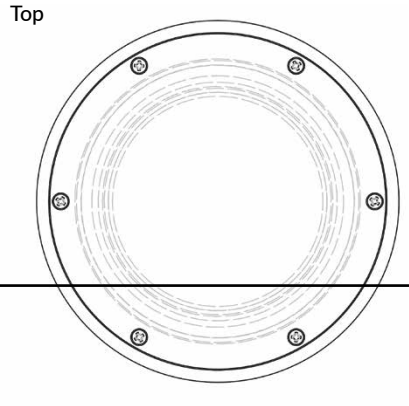



Front

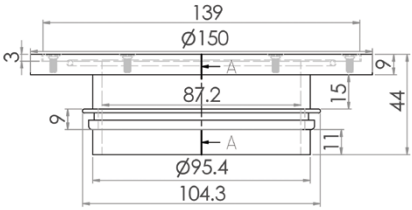

Cross Section

