CHEFS DEPOT
Culinary Supplies

CARPIGIANI



161
T G SP

Single flavor countertop machine to produce creamy Soft Serve Gelato, Ice Cream, Sorbets & Frozen Yogurt



Performance and Quality
- **Gravity feed** up to obtain 40% overrun. Easy to adjust even when the tank is full!
- **Hard-O-Tronic®** electronic control system to choose the consistency of the soft serve in a simple manner and change it for a variety of styles of your choosing

Operations
- **The Self-Pasteurization system** allows the wash cycle to be done up to a maximum 42-day interval

Smart tools
- User-Friendly **LCD Control panel**
- Remote assistance with **Teorema** Connectivity
- **QR code** ensures updated access to the latest machine information

TEOREMA* | QR CODE | Carpi Care kit | Carpi Clean kit**

*optional **request them from your dealer
to always keep your machine hygienically perfect.

carpigiani.com

161 T G SP

www.bipluci.it | printed 03/2023

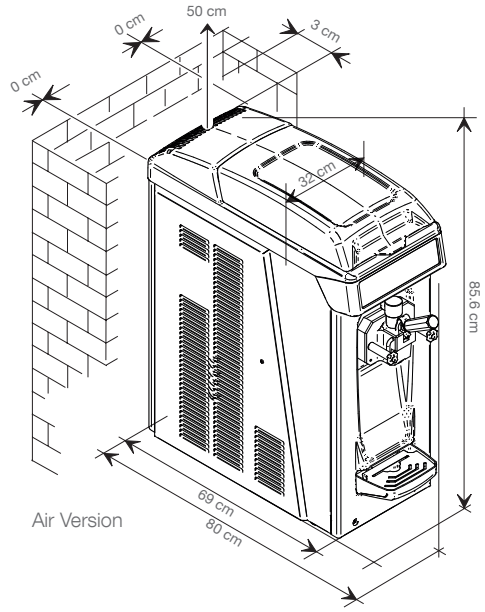

Air Version

Standard configurations

- Gravity
- Removable High efficiency beater in POM
- Star Door
- Self Closing
- Stainless **Steel** front panel
- Air-cooled
- Self-pasteurization

Optional configurations

- Nozzle
- Teorema

	Flavours	Mix Delivery System	Hourly production	Tank Capacity	Cylinder Capacity	Rated Power Input	Fuse Size	Power Supply	Cooling System	Refrige-rant	Net Weight
			(75gr portions)	*lt*	*lt*	*kW*	*A*				*kg*
161 T G SP	1	Gravity	200*	5	1.35	2.3	16	230/50/1**	Air	R452***	95

* production capacity depends on the mix used and the room temperature ** other voltages and cycles available upon request *** alternative solutions available

161 T G SP is produced by Carpigiani with Quality System UNI EN ISO 9001.

All specifications mentioned must be considered approximate; Carpigiani reserves the right to modify, without notice, all parts deemed necessary.

CARPIGIANI
carpigiani.com

CARPIGIANI services
CARPIGIANI SOFT SERVE AND SHAKE CONSULTING
GELATO MUSEUM

Via Emilia, 45 - 40011 Anzola dell'Emilia - BOLOGNA, Italy - T. +39 051 6505111 - info@carpigiani.it

an Ali Group Company
GROUP
The Spirit of Excellence

Ordinary Maintenance Schedule

	6 MONTHS	12 MONTHS	WHY IS IT NEEDED?
SUPPLIED WITH THE MACHINE			
Carpi Care kit			Kit of consumable parts to keep your machine's hygiene level at the top.
Carpi Clean kit			Set of brushes of the correct size to thoroughly clean every component of the machine.
RECOMMENDED			
Brushes kit	1	1	Set of brushes of the correct size to thoroughly clean every component of the machine. Replacement is necessary to ensure the best cleaning and hygiene. 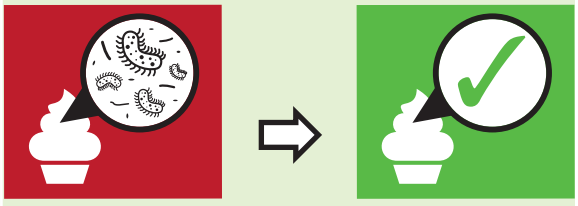

Carpigiani recommends a preventive maintenance visit by Carpigiani approved service providers at least once a year.

Ordinary Maintenance Schedule

MANDATORY

	6 MONTHS	12 MONTHS	WHY IS IT NEEDED?
			
Carpi Care kit	1	1	Kit of consumable parts to keep your machine's hygiene level at the top. It avoids machine downtime by keeping accessible parts that can be lost or damaged during cleaning procedures handy. 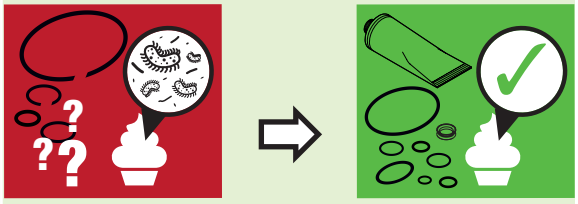
			Kit of scrapers to ensure the best cooling efficiency and quality of the product. Worn scrapers increase product dispensing time and recovery time. Replacement is required every 6 months.
			
Beater Body+Idler	-	1	Beater Body+Idler to ensure the correct functioning of the scrapers and reduce recovery time. 

Carpigiani recommends a preventive maintenance visit by Carpigiani approved service providers at least once a year. *Reported values depend on the mix used and the room temperature.