apuro

Stick Blender

Instruction manual

CHEFS DEPOT
Culinary Supplies



Model:

FS440-A/FS441-A/FS442-A

Safety Instructions

The blender is a dangerous appliance and must only be used by trained personnel in accordance with these instructions.

- A service agent/qualified technician should carry out installation and any repairs if required. Do not remove any components on this product.
- Consult Local and National Standards to comply with the following:
  - Health and Safety at Work Legislation
  - Fire Precautions
  - Wiring Regulations
  - Building Regulations
- **The protective blade guard and shaft of this appliance are designed for submersion in liquids or half-liquid mixtures. To protect against risk of electrical shock, never submerge any other portion of this unit in any liquid.**
- **Blade is sharp – handle carefully.**
- DO NOT use with loose or damaged blades.
- The use of accessory attachments not recommended or sold by APURO may cause fire, electric shock, or injury, which will invalidate your guarantee.
- DO NOT remove food from the appliance until the blending attachment have come to a complete stop.
- Avoid contacting moving parts. Keep hands, hair, clothing and utensils away from blade and mixing container while operation to prevent the possibility of severe injury to persons and/or damage to the appliance.
- DO NOT operate the unit if damaged.
- DO NOT use jet/pressure washers to clean the appliance.
- DO NOT attempt to blend items that this machine is not designed for. This can damage the blending attachments.
- DO NOT let cord hang over edge of table or counter, or touch hot surfaces.

FS440-A_FS441-A_FS442-A_A5_v2_20220810.indb 2 2022/8/10 14:35

- Always switch off and disconnect the power supply to the appliance when not in use, before cleaning and before putting on or taking off parts.
- Not suitable for outdoor use.
- Keep all packaging away from children. Dispose of the packaging in accordance to the regulations of local authorities.
- If the power cord is damaged, it must be replaced by an APURO agent or a recommended qualified technician in order to avoid a hazard.
- This appliance is not intended for use by persons (including children) with reduced physical, sensory or mental capabilities, or lack of experience and knowledge, unless they have been given supervision or instruction concerning the use of the appliance by a person responsible for their safety.
- Children should be supervised to ensure that they do not play with the appliance.
- APURO recommend that this appliance should be periodically tested (at least annually) by a Competent Person. Testing should include, but not be limited to: Visual Inspection, Polarity Test, Insulation Continuity and Functional Testing.

Product Description

FS440-A - APURO Variable Speed Stick Blender - 300mm
FS441-A - APURO Variable Speed Stick Blender - 400mm
FS442-A - APURO Variable Speed Stick Blender - 500mm

Introduction

Please take a few moments to carefully read through this manual. Correct maintenance and operation of this machine will provide the best possible performance from your APURO product.

This appliance is intended for use in kitchens of restaurants, canteens and so on when mixing and liquidising and giving soups and sauces a perfect consistency. The unit can be used directly in a container to mix everything from fish soups, stews, creams and salad dressings to pancake mixes, pastes, sauces, mayonnaise and alike.

Pack Contents

The following is included:

- Power pack
- Detachable shaft with triangle blade pre-mounted
- Emulsifying blade
- Blade removal kits
- Instruction manual

APURO prides itself on quality and service, ensuring that at the time of packaging the contents are supplied fully functional and free of damage. Should you find any damage as a result of transit, please contact your APURO dealer immediately.

FS440-A_FS441-A_FS442-A_A5_v2_20220810.indb 3 2022/8/10 14:35

Operation

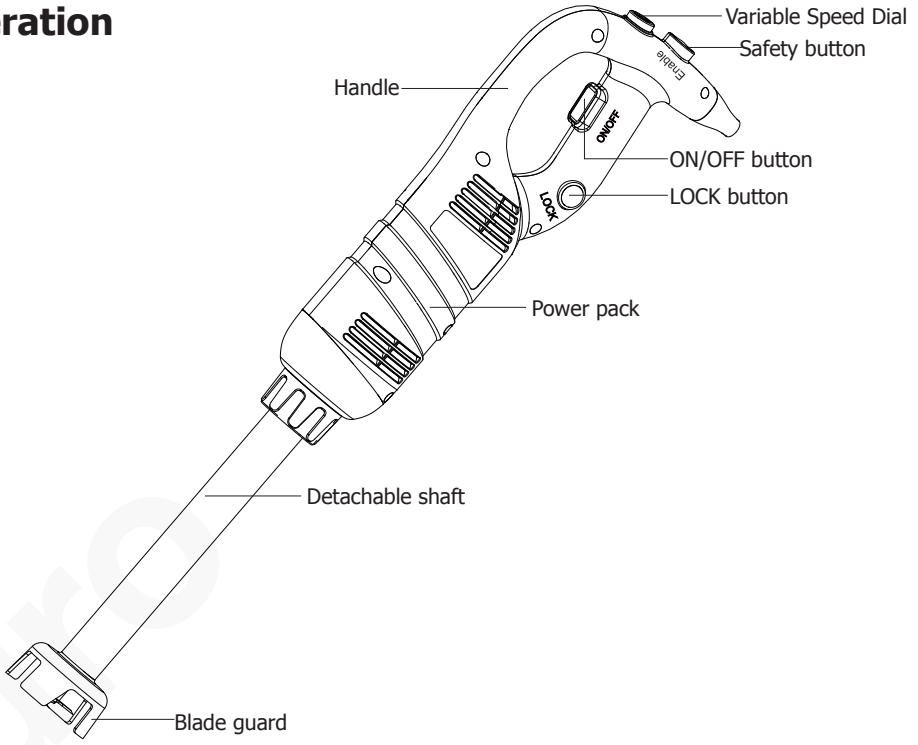

Assembly

Before assembly, ensure to
- **Disconnect the power pack from the power supply.**
- **Clean all removable parts thoroughly.**

1. Align and insert the pins on the power pack into the notches on the shaft.
2. Screw the cuff of the shaft as arrow shown onto the power pack until secured in place.

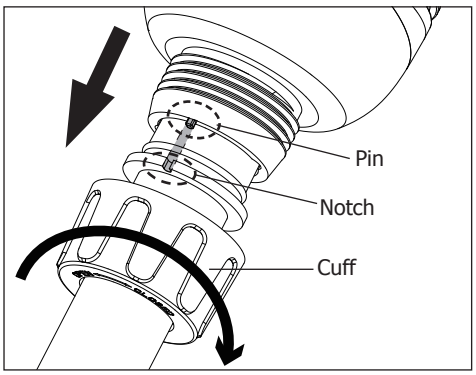

Blending

1. Ensure the ON/OFF button (3) is in the released position.
2. Select speed using the variable speed dial (1).
3. Connect the appliance to the power supply.
4. Press and hold the safety button (2) with one hand.
5. Press and hold the ON/OFF button to start the blender. Now you can release the safety button.
6. To stop the blender, just release the ON/OFF button. The safety button will release automatically.

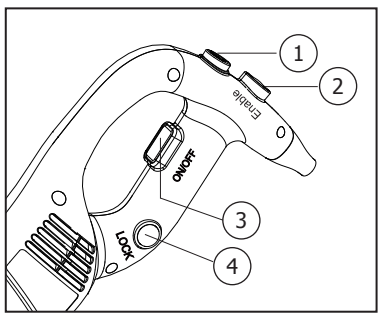

FS440-A_FS441-A_FS442-A_A5_v2_20220810.indb 4 2022/8/10 14:35

Continuous blending

Follow steps1 to 5 as above, then:

1. While the ON/OFF button is in the depressed position, press the LOCK button (4).
2. Now release the ON/OFF button. The appliance will function continuously.
3. To stop the appliance, just press the ON/OFF button once.

- **For greater control, we recommend holding the blender by the handle and the bottom of the power pack. Furthermore, it is recommended to tilt the bender slightly to prevent the blade guard from touching the bottom of the container.**
- **Always make sure that the blade guard is sufficiently immersed to avoid splashing and that the air vents of the motor unit does not come into contact with any liquid. For optimum efficiency, two thirds of the shaft should be immersed during preparation.**
- **During use, the stainless steel shaft may become hot. Take care not to touch it.**
- **It is advisable to start at a low speed.**

Removing the lodged food

If a piece of food gets lodged in the protective blade guard surrounding the metal blade, please follow the instructions below:

1. Turn off blender, disconnect from power supply and let it come to a complete stop.
2. Remove the shaft from the power pack.
3. Use a spatula to carefully remove the food lodged in the blade guard. **The blade is sharp - Never attempt to use fingers to remove any lodged object.**
4. Re-attach the shaft, plug unit back in and continue blending.

Changing the blade

Warning: Before removing blade, ensure to turn off blender, disconnect from power supply and let it come to a complete stop.

Blade is sharp - handle carefully.

- A triangle blade is pre-mounted on the shaft.
- A round emulsifying blade is also supplied, ideal for use with nursery/special diets to prepare purée of vegetables, porridge, raw carrot purée, fruit creams, etc. To use it:

1. Remove the shaft from the power pack.
2. Using the triangle blade removal kit, with the round end holding the shaft top while the triangle end covering the blade then unscrewing, remove the triangle blade from the shaft.

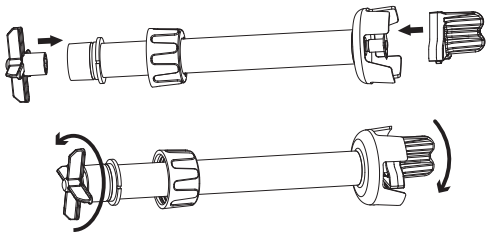

3. Mount the emulsifying blade securely using the emulsifying blade removal kit.

Cleaning, Care & Maintenance

Warning: Always ensure to disconnect unit from power supply, let it cool down and come to a complete stop before cleaning.

- After use, clean in time to prevent food from sticking to surfaces.
- Clean the power pack surface using a damp cloth. Always wipe dry after cleaning. Never immerse the motor part in water or rinse it under running water.
- Do not allow any moisture to enter the interior via any ventilation slots.

Cleaning the shaft, blade guard, and blade

- Remove the food residue as much as possible.
- Place the shaft and blade guard into a container with water, then switch on for a few seconds for thorough cleaning.
- **WARNING:** Always dry the blades well after cleaning to avoid spotting.
- It is vital to clean thoroughly between each job using a detergent or disinfectant, but never use pure bleach. For plastic parts, do not use detergents that are too alkaline.

FS440-A_FS441-A_FS442-A_A5_v2_20220810.indb 5 2022/8/10 14:35

Troubleshooting

A qualified technician must carry out repairs if required.

Fault	Probable Cause	Solution
The unit is not working	The unit is not switched on	Check the unit is plugged in correctly and switched on
	Plug or lead is damaged	Replace plug or lead
	Mains power supply fault	Check mains power supply
Unit stops working suddenly	Overheating protection is activated	Release the ON/OFF button, then unplug. Wait a few minutes for the motor to cool down and the thermal safety mechanism to reset, then restart
Loud noise	Blade not correctly fitted	Release the ON/OFF button, then unplug. Re-install the blade

Technical Specifications

Model	Voltage	Power	Current	Blending Capacity	Shaft length	Dimensions h x Ø mm	Weight
FS440-A	220-240V~ 50Hz	500W	2.2A	60L	300mm	708 x 100	3.55kg
FS441-A		500W	2.2A	100L	400mm	808 x 100	4.00kg
FS442-A		500W	2.2A	120L	500mm	908 x 100	4.20kg

Note: Due to our continuing program of research and development, the specifications herein may subject to change without notice.

Electrical Wiring

The plug is to be connected to a suitable mains socket.
This appliance is wired as follows:

- Live wire (coloured brown) to terminal marked L
- Neutral wire (coloured blue) to terminal marked N
- Earth wire (coloured green/yellow) to terminal marked E



This appliance must be earthed.
If in doubt consult a qualified electrician.
Electrical isolation points must be kept clear of any obstructions. In the event of any emergency disconnection being required they must be readily accessible.

Compliance

The product must not be disposed of as household waste. To help prevent possible harm to human health and/or the environment, the product must be disposed of in an approved and environmentally safe recycling process. For further information on how to dispose of this product correctly, contact the product supplier, or the local authority responsible for waste disposal in your area.

APURO parts have undergone strict product testing in order to comply with regulatory standards and specifications set by international, independent, and federal authorities.

APURO products have been approved to carry the following symbol:



All rights reserved. No part of these instructions may be produced or transmitted in any form or by any means, electronic, mechanical, photocopying, recording or otherwise, without the prior written permission of APURO.
Every effort is made to ensure all details are correct at the time of going to press, however, APURO reserve the right to change specifications without notice.

FS440-A_FS441-A_FS442-A_A5_v2_20220810.indb 6 2022/8/10 14:35

DECLARATION OF CONFORMITY

• Conformiteitsverklaring • Déclaration de conformité • Konformitätserklärung • Dichiarazione di conformità • • Declaración de conformidad • Declaração de conformidade

Equipment Type • Uitrustingstype • Type d'équipement • Gerätetyp • Tipo di apparecchiatura • Tipo de equipo • Tipo de equipamento		**Model** • Modèle • Modell • Modello • Modelo • Malli
Variable speed stick blender – 300mm Variable speed stick blender – 400mm Variable speed stick blender – 500mm		FS440-A FS441-A FS442-A
Application of Territory Legislation & Council Directives(s) Toepassing van Europese Richtlijn(en) • Application de la/des directive(s) du Conseil • Anwendbare EU-Richtlinie(n) • Applicazione delle Direttive • Aplicación de la(s) directiva(s) del consejo • Aplicação de directiva(s) do Conselho	**Electrical safety** EN ISO 12100:2010 EN 60204-1:2018 EN 12853:2001 +A1:2010 **Electro-Magnetic Compatibility** EN 55014-1:2017 EN 55014-2:2015 EN IEC 61000-3-2:2019 EN 61000-3-3:2013 +A1:2019	
Producer Name • Naam fabrikant • Nom du producteur • Name des Herstellers • Nome del produttore • Nombre del fabricante • Nome do fabricante		**Apuro**

I, the undersigned, hereby declare that the equipment specified above conforms to the above Territory Legislation, Directive(s) and Standard(s).
Ik, de ondergetekende, verklaar hierbij dat de hierboven gespecificeerde uitrusting goedgekeurd is volgens de bovenstaande Richtlijn(en) en Standaard(en).
Je soussigné, confirme la conformité de l'équipement cité dans la présente à la / aux Directive(s) et Norme(s) ci-dessus
Ich, der/die Unterzeichnende, erkläre hiermit, dass das oben angegebene Gerät der/den oben angeführten Richtlinie(n) und Norm(en) entspricht.
Il sottoscritto dichiara che l'apparecchiatura di sopra specificata è conforme alle Direttive e agli Standard sopra riportati.
El abajo firmante declara por la presente que el equipo arriba especificado está en conformidad con la(s) directiva(s) y estándar(es) arriba mencionadas.
Eu, o abaixo-assinado, declaro que o equipamento anteriormente especificado está em conformidade com a(s) anterior(es) Directiva(s) e Norma(s)

Date • Data • Date • Datum • Data • Fecha • Data	**9th July 2021**	
Signature • Handtekening • Signature • Unterschrift Firma • Firma • Assinatura	DocuSigned by: Ashley Hooper B39382C9FD9C478...	DocuSigned by: Josie Holt 3582E210C4054DA...
Full Name • Volledige naam • Nom et prénom • Vollständiger Name • Nome completo • Nombre completo • Nome por extenso	**Ashley Hooper**	**Josie Holt**
Position • Functie • Fonction • Position • Qualifica • Posición • Função	**Technical & Quality Manager**	**Commercial Manager/ Responsible Supplier**
Producer Address • Adres fabrikant • Adresse du producteur • Anschrift des Herstellers • Indirizzo del produttore • Dirección del fabricante • Morada do fabricante	**Fourth Way, Avonmouth, Bristol, BS11 8TB United Kingdom**	**15 Bagdally Road, Campbelltown NSW 2560**

apuro



FS440-A_FS441-A_FS442-A_A5_v2_2022/08/10