CHEFS DEPOT
Culinary Supplies

JETSTREAM Plumbing

Electronic Sensor Tap

JET4003W



Wall Mounted Electronic Tap with Infrared Sensor and Battery & Mains Power

6-star 6 lpm
(Nominal Flow : 6 lpm)

Product Features

- Digital sensor technology; Sensor range, run timing and hygiene lush programming are adjustable post installation with the use of remote controls (sold separately)
- Extension leads available for both power and sensor
- IP67 rated control box houses the solenoid valve and waterproof connections
- Integral strainer minimises fouling by debris
- Both battery and mains power options available (Configuration can be changed following installation)
- Hygiene lush programming minimises the risk of Legionella from infrequently used ixtures
- Recommended for all types of projects

Technical Information

Materials	Body: DZR Brass Solenoid Valve: Engineering Grade Plastic
Cartridge	6 Volt Solenoid Valve
Cartridge Size	15 mm
Inlet	15 mm Female Flexible Connections (G1/2" BSP)
Outlet	Aerated Flow
Run time	2 seconds (auto on / off)
Working Pressures	50kPa-500kPa
Recommended Working Pressures	350kPa
Working Temperatures	5°C - 50°C
Finish / Colour	Chrome Plated

Product Certifications

WATER RATING
www.waterrating.gov.au
6.0 litres per minute
Licence No. 1334

WELS: T17974

WaterMark
AS/NZS 3718: 2005
Licence No. WMKA25617
SAI GLOBAL

Technical Drawings

Control Box

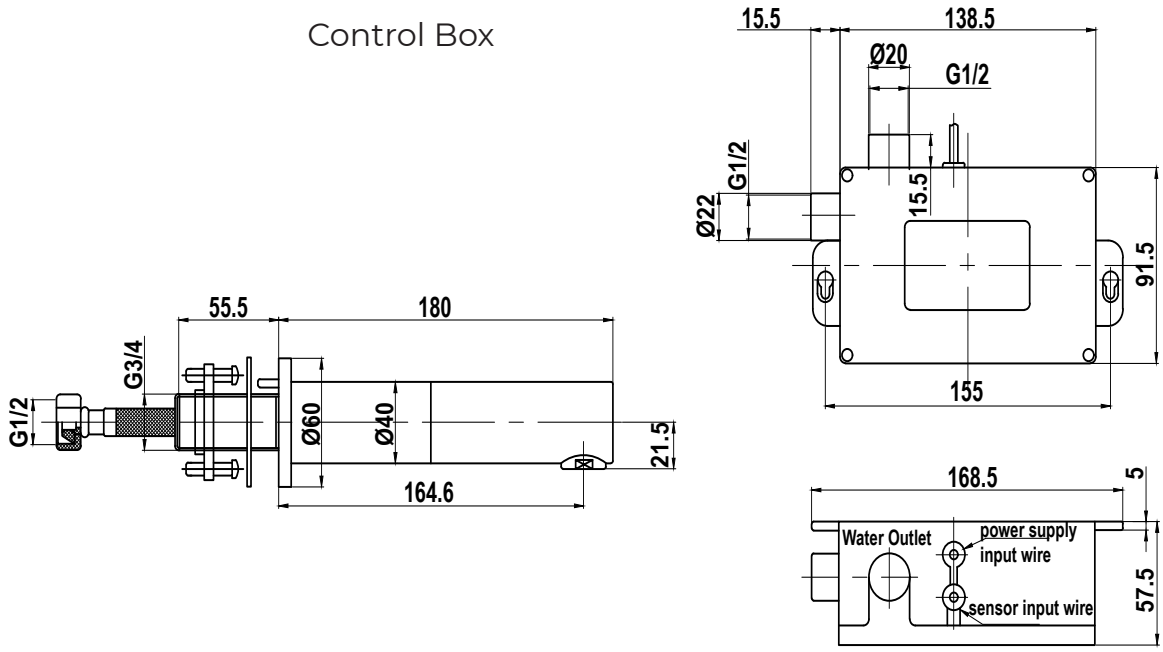

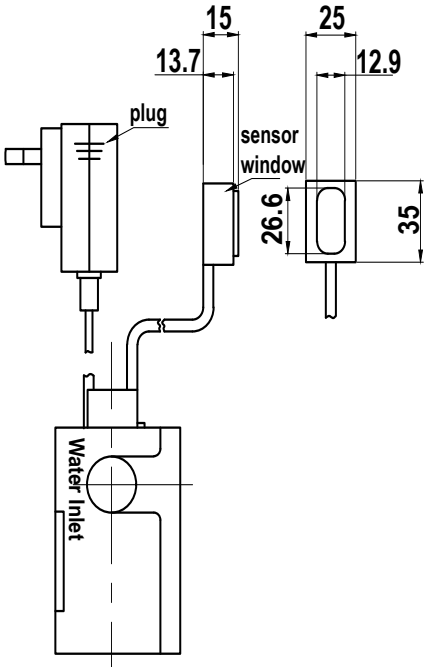

All measurements are in millimetres and should be used as a guide only

JETSTREAM Plumbing



Lever Sink Set

JET3300DCB

Deck Mounted Sink Set with 300mm Square Swivel Spout and 100mm Lever Handles

4 star 7.5 lpm
(Nominal Flow : 7.25 lpm)

Product Features

- No crevices to eliminate bacterial build-up
- Red, Yellow & Blue button indicators supplied
- Soft seal, easy action ceramic disk cartridge
- Allen key fixings for secure handles and outlets
- Product customization available
- Recommended for use in health and aged care projects

Technical Information

Materials	Body: DZR Brass Handle: Zinc Alloy
Cartridge	Ceramic Disk (Quarter Turn)
Cartridge Size	15mm
Inlet	15mm (G 1/2" BSP)
Outlet	Aerated Flow
Working Pressures	50kPa-500kPa
Recommended Working Pressures	350kPa
Working Temperatures	5°C - 80°C
Finish / Colour	Satin Chrome Plated

Product Certifications

WATER RATING
www.waterrating.gov.au
7.5 litres per minute
Licence No. 1334

WaterMark
AS/NZS 3718: 2005
Licence No. WMKA25617
SAI GLOBAL

Technical Drawings

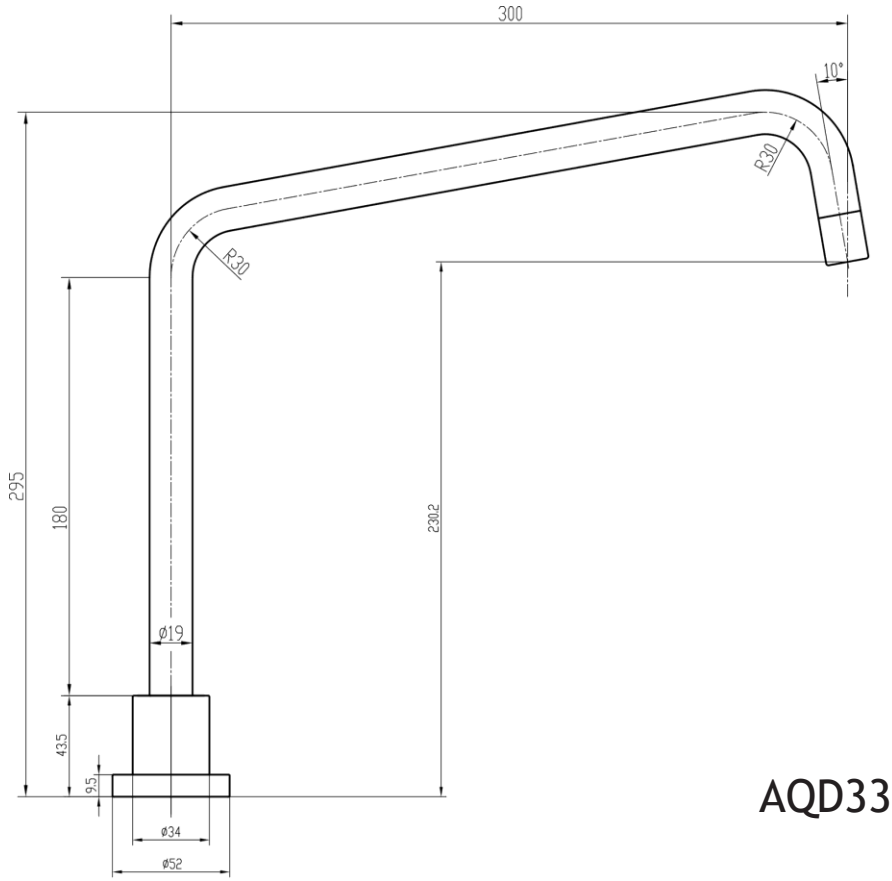

AQD3300CB

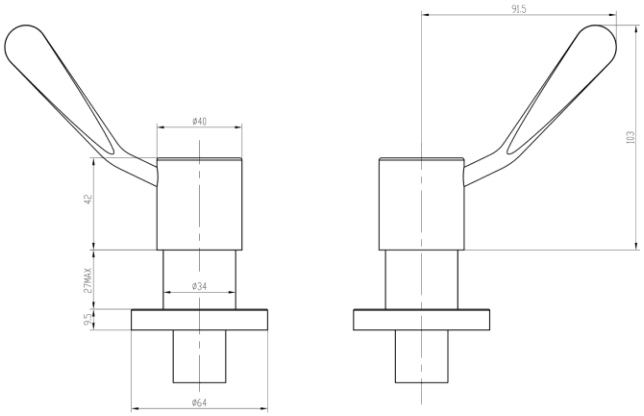

All measurement are in millimeters and should be used as a guide only

JETSTREAM Plumbing

Timed FlowValve
JET780D



Wall Mounted Single Temperature Timed Flow Knee Operated Valve with Knee Wand Attachment

Product Features

- Soft-close, hydraulically operated time flow means that it's suitable for all markets
- Designed to be durable and anti-vandal Suitable for use in public areas
- One service kit for easy maintenance
- Supplied with inlet strainer
- Recommended for commercial and public projects

Technical Information

Materials	Body: DZR Brass Wand: Engineering Plastic
Cartridge	Timed Flow (Hydraulic)
Cartridge Size	15mm
Inlet	15mm Male (G 1/2" BSP)
Outlet	15mm Male (G 1/2" BSP)
Run time	15 (+/- 2) seconds (Fixed)
Working Pressures	150kPa-500kPa
Recommended Working Pressures	350kPa
Working Temperatures	5°C - 50°C
Finish / Colour	Chrome Plated
Warranty	5 years*

Product Certifications

WaterMark
AS/NZS 3718: 2005
Licence No. WM 74513
ApprovalMark

Technical Drawings

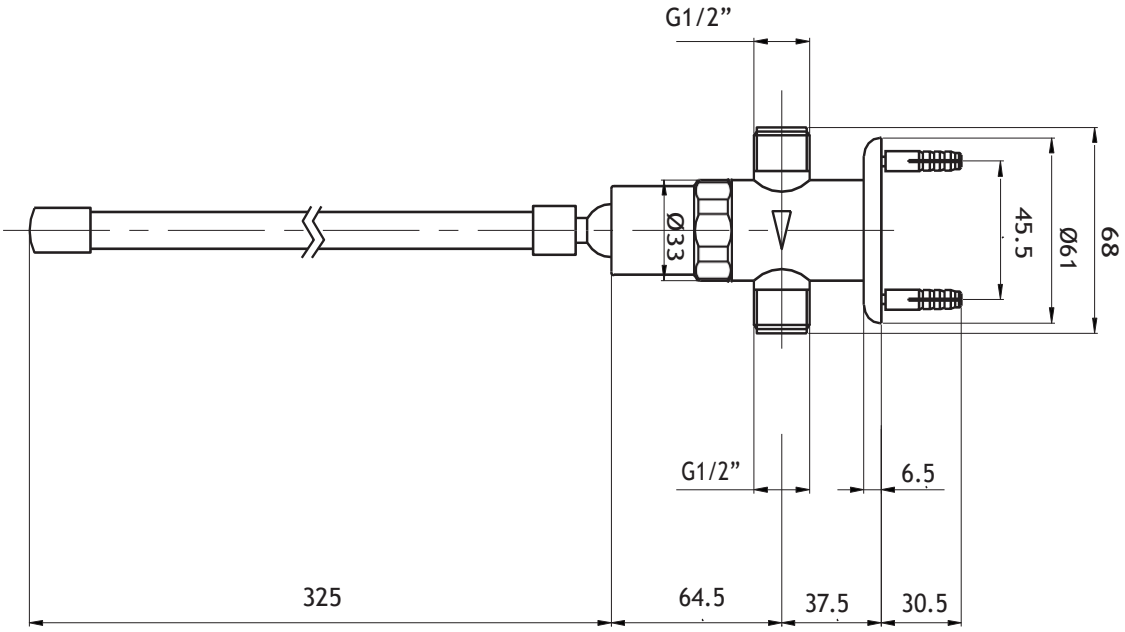

All measurements are in millimeters and should be used as a guide only

JETSTREAM Plumbing



Single Lever Basin Mixer

JET3000D

Stainless Steel Deck Mounted Gooseneck Swivel Sink Mixer with Red & Blue Printed Handle - 4lpm

6 star 3.5 lpm
(Nominal Flow : 2.9 lpm)

Product Features

- Soft close operation
- Printed indicators eliminate crevices for bacteria build up
- Stainless steel can be rejuvenated at any time over the life of the product
- Environmentally friendly, no electroplating processes used throughout the product lifecycle
- Laminar flow to reduce aerosol at the outlet
- Additional flow rates available
- Recommended for commercial, health and hospitality projects
- Product customization available

Technical Information

Materials	Body: Stainless Steel (SS304) Handle: Stainless Steel (SS304)
Cartridge	Ceramic Disk
Cartridge Size	35mm
Inlet	15mm Female Flexible Connections (G1/2" BSP)
Outlet	Laminar Flow
Working Pressures	50kPa-500kPa
Recommended Working Pressures	350kPa
Working Temperatures	5°C - 80°C
Finish / Colour	Brushed Stainless Steel
Warranty	2 years*

Product Certifications

WATER RATING
www.waterrating.gov.au
3.5 litres per minute
Licence No. 1334

WaterMark
AS/NZS 3718: 2005
Licence No. WM 74827
ApprovalMark

Technical Drawings

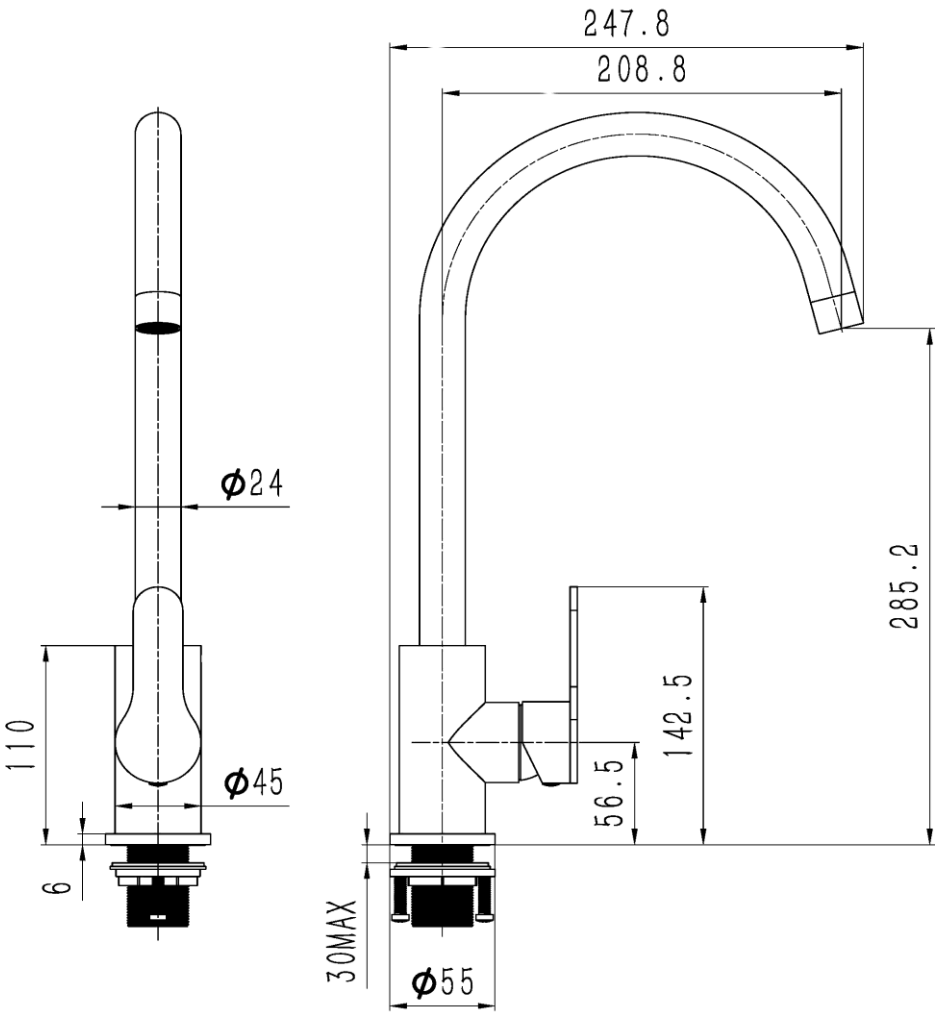

All measurements are in millimeters and should be used as a guide only

JETSTREAM Plumbing



Single Lever Sink Mixer

JET3150D

Deck Mounted Gooseneck Sink Mixer with Dual Handles

4 star 7.5 lpm
(Nominal Flow : 6.43 lpm)

Product Features

- Soft close operation
- Red, yellow & blue indicators provided
- Supplied with PEX inlet hoses
- Recommended for commercial, health and hospitality projects
- Product customization available

Technical Information

Materials	Body: DZR Brass Handle: Zinc Alloy
Cartridge	Ceramic Disk
Cartridge Size	15mm
Inlet	15mm Female Flexible Connections (G1/2" BSP)
Outlet	Aerated Flow
Working Pressures	150kPa-500kPa
Recommended Working Pressures	350kPa
Working Temperatures	5°C - 80°C
Finish / Colour	Satin Chrome Plated
Warranty	2 years*

Product Certifications

WATER RATING
www.waterrating.gov.au
7.5 litres per minute
Licence No. 1334

WaterMark
AS/NZS 3718: 2005
Licence No. WMKA25617
SAI GLOBAL

Technical Drawings

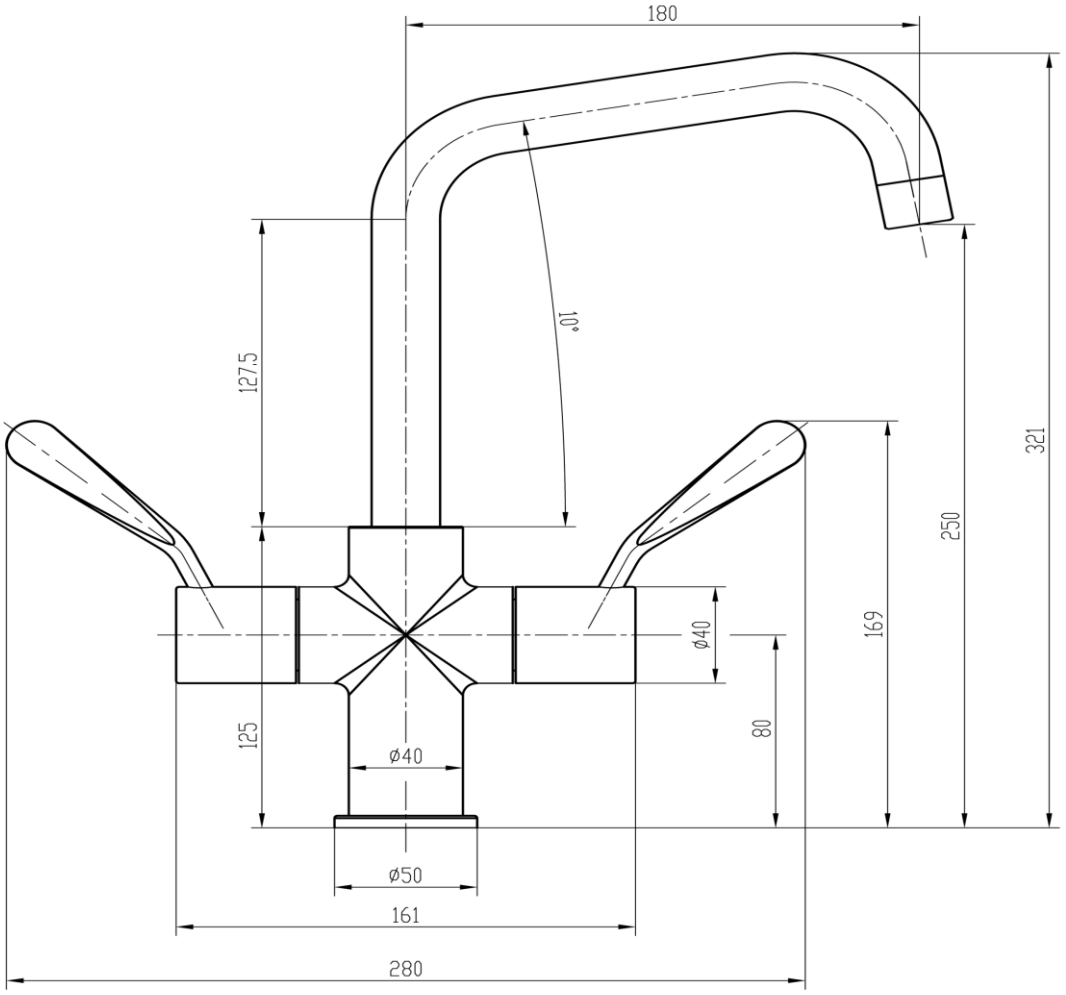

All measurements are in millimeters and should be used as a guide only

JETSTREAM Plumbing



Lever Mixing Set

JET3180WCB

Wall Mounted Concealed Mixing Set with 180mm Square Swivel Spout and 100mm Lever Handles

4 star 7.5 lpm
(Nominal Flow : 7.37 lpm)

Product Features

- No crevices to eliminate bacterial build-up
- Red, Yellow & Blue button indicators supplied
- Soft seal, easy action ceramic disk cartridge
- Allen key fixings for secure handles and outlets
- Product customization available
- Recommended for use in health and aged care projects

Technical Information

Materials	Body: DZR Brass Handle: Zinc Alloy
Cartridge	Ceramic Disk (Quarter Turn)
Cartridge Size	15mm
Inlet	15mm (G 1/2" BSP)
Outlet	Aerated Flow
Working Pressures	50kPa-500kPa
Recommended Working Pressures	350kPa
Working Temperatures	5°C - 80°C
Finish / Colour	Satin Chrome Plated

Product Certifications

WATER RATING www.waterrating.gov.au 7.5 litres per minute Licence No. 1334

WaterMark
AS/NZS 3718: 2005
Licence No. WMKA25617
SAI GLOBAL

.

Technical Drawings

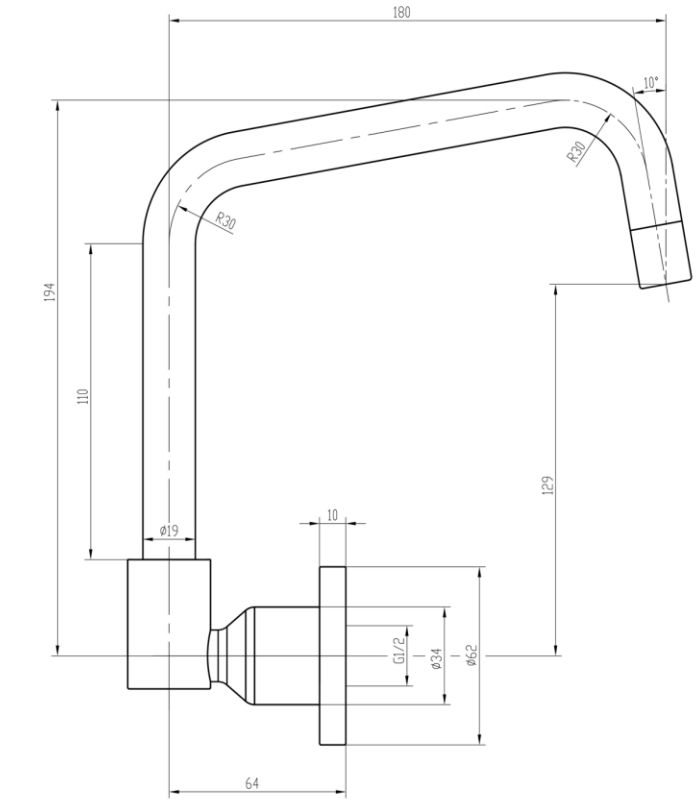

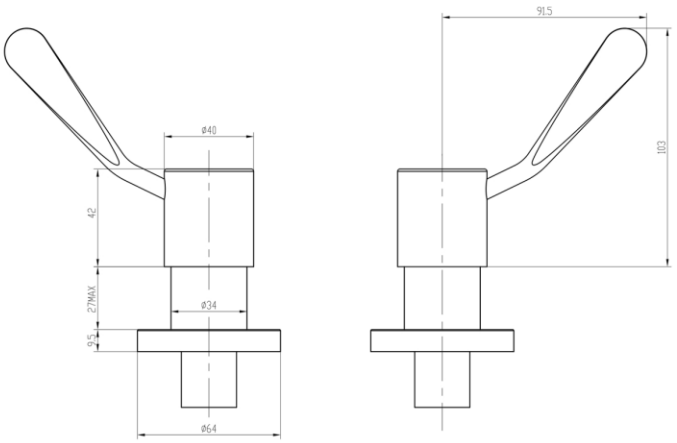

All measurements are in millimeters and should be used as a guide only

JETSTREAM
Plumbing

Timed Flow Pillar Tap



JET745D

Deck Mounted Single Temperature Timed Flow Pillar Tap

6-star 3.5 lpm
(Nominal Flow : 3.1 lpm)

Product Features

- Soft-close, hydraulically operated time flow means that it's suitable for all markets
- Designed to be durable and anti-vandal Suitable for use in public areas
- One service kit for easy maintenance
- Supplied with inlet strainer and flow controller
- Red, Yellow & Blue button indicators supplied
- Up to 0-40 (+/-10) seconds run time available
- Adjustable Timed Cartridge available
- Recommended for commercial and public projects

Technical Information

Materials	DZR Brass
Cartridge	Timed Flow (Hydraulic)
Cartridge Size	15 mm
Inlet	15mm Male (G 1/2" BSP)
Outlet	Free Flow
Run time	5 (+/- 1) seconds (Fixed)
Working Pressures	150kPa-500kPa
Recommended Working Pressures	350kPa
Working Temperatures	5°C - 50°C
Finish / Colour	Chrome Plated

Product Certifications

WATER RATING
www.waterrating.gov.au
3.5 litres per minute
Licence No. 1334

WaterMark
AS/NZS 3718: 2005
Licence No. WM 74513
ApprovalMark

Technical Drawings

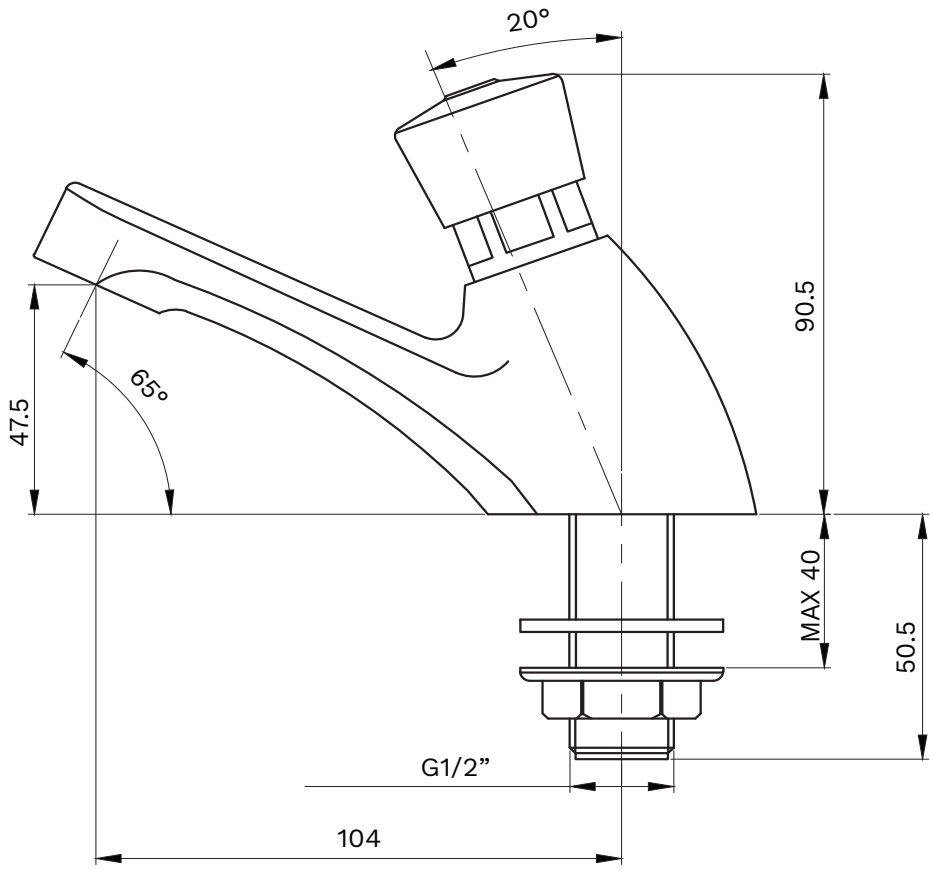

JETSTREAM Plumbing



Electronic Sensor Tap

JET1000D

Stainless Steel Deck Mounted Right Angle Electronic Tap with Laser Sensor and Battery & Mains Power

6-star 6.0 lpm
(Nominal Flow : 6.0 lpm)

Product Features

- Advanced laser sensor technology provides precision, consistency and with variable programming. This avoids nuisance triggering and activates on all skin tones
- 100% Lead-Free
- Sensor range is adjustable post installation without the use of tools
- IP67 rated control box enclosure houses the solenoid valve and waterproof connections
- Extension leads available for either power or sensor (not both simultaneously)
- Integral line strainer minimises fouling by debris
- Both battery and mains power options available (Configuration can be changed following installation)
- Factory-set runtime, sensitivity and hygiene flush options available
- Hygiene flush programming minimises the risk of Legionella from infrequently used fixtures
- All waterways are smooth bored for improved infection control
- Recommended for all types projects

Technical Information

Materials	Body: Stainless Steel (SS316) Solenoid Valve: Engineering Grade Plastic
Cartridge	Solenoid Valve 6 Volt Solenoid 15mm
Cartridge Size	15 mm
Inlet	15 mm Female Flexible Connections (G1/2" BSP)
Outlet	Laminar Flow
Run time	2 seconds (auto on / off)
Working Pressures	50kPa-500kPa
Recommended Working Pressures	350kPa
Working Temperatures	5°C - 50°C
Finish / Colour	Polished Stainless Steel

Product Certifications

The more stars the more water efficient
WATER RATING
www.waterrating.gov.au
6.0 litres per minute
In accordance with AS/NZS 6400
Licence No. 1334
GENTEC AUSTRALIA

WaterMark
AS/NZS 3718: 2005
Licence No. WM 74827
ApprovalMark

Control Box

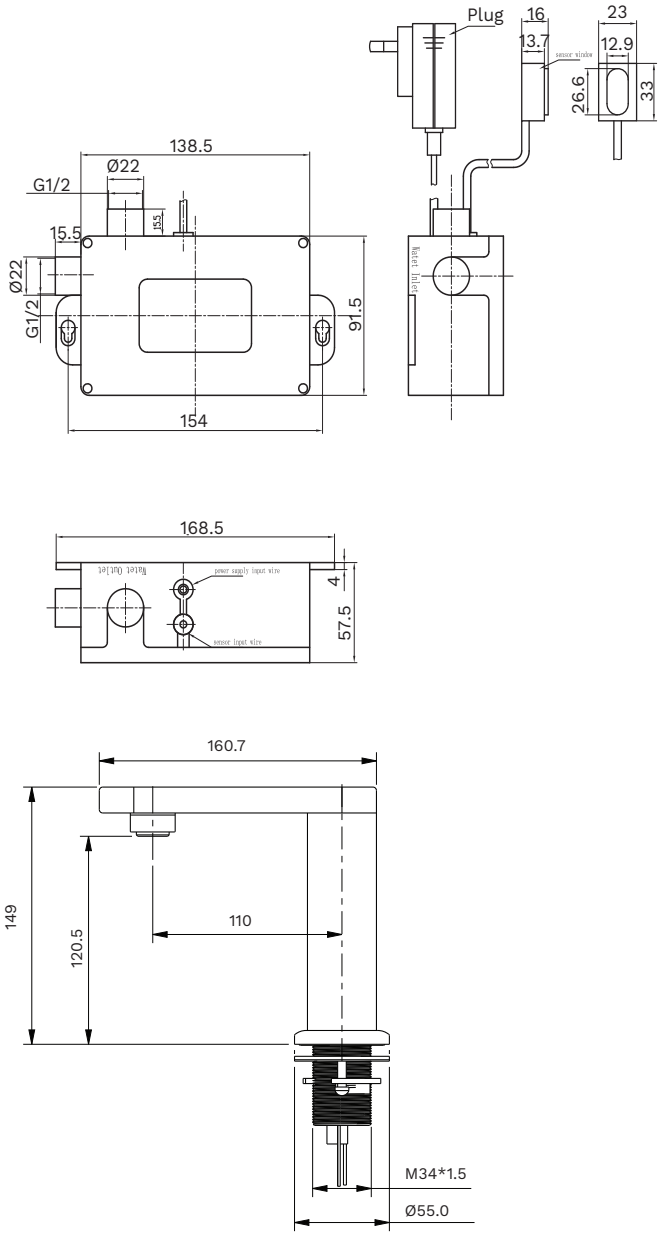

All measurements are in millimetres and should be used as a guide only

JETSTREAM Plumbing

Pre-rinse Unit

JET1200D

Stainless Steel Deck Mounted Pre-rinse Unit with Pot Filler and Mixer



6-star 2.5 lpm
(Nominal Flow : 2.19 lpm)

Product Features

- Lead Free
- Soft Close Operation
- One cartridge used across the Jetstream Food Service range for easy maintenance
- The soft, easy-to-clean hose provides flexibilityandease-of-use
- Soft spring for easy operation
- Double Check Valve
- (SS316) PEX inlet hoses
- Durable stainless steel blade spray for convenient cleaning
- Recommended for commercial kitchens

Technical Information

Materials	Stainless Steel (SS304)
Cartridge	Self closing / Ceramic Disk
Cartridge Size	25mm
Inlet	15 mm Female Flexible Connections (G1/2" BSP)
Outlet	Blade Spray / Laminar Flow
Working Pressures Recommended	150kPa-500kPa
Working Pressures	350kPa
Working Temperatures	5°C - 80°C
Finish / Colour	Brushed Stainless Steel

Product Certifications

The more stars the more water efficient
WATER RATING
www.waterrating.gov.au
2.5 litres per minute (spray tap)
In accordance with AS/NZS 6400
Licence No. 1334
GENTEC AUSTRALIA
Second outlet
5 star
5.5 litres per minute

WaterMark
AS/NZS 3718: 2005
Licence No. WM 74827
ApprovalMark

Technical Drawings

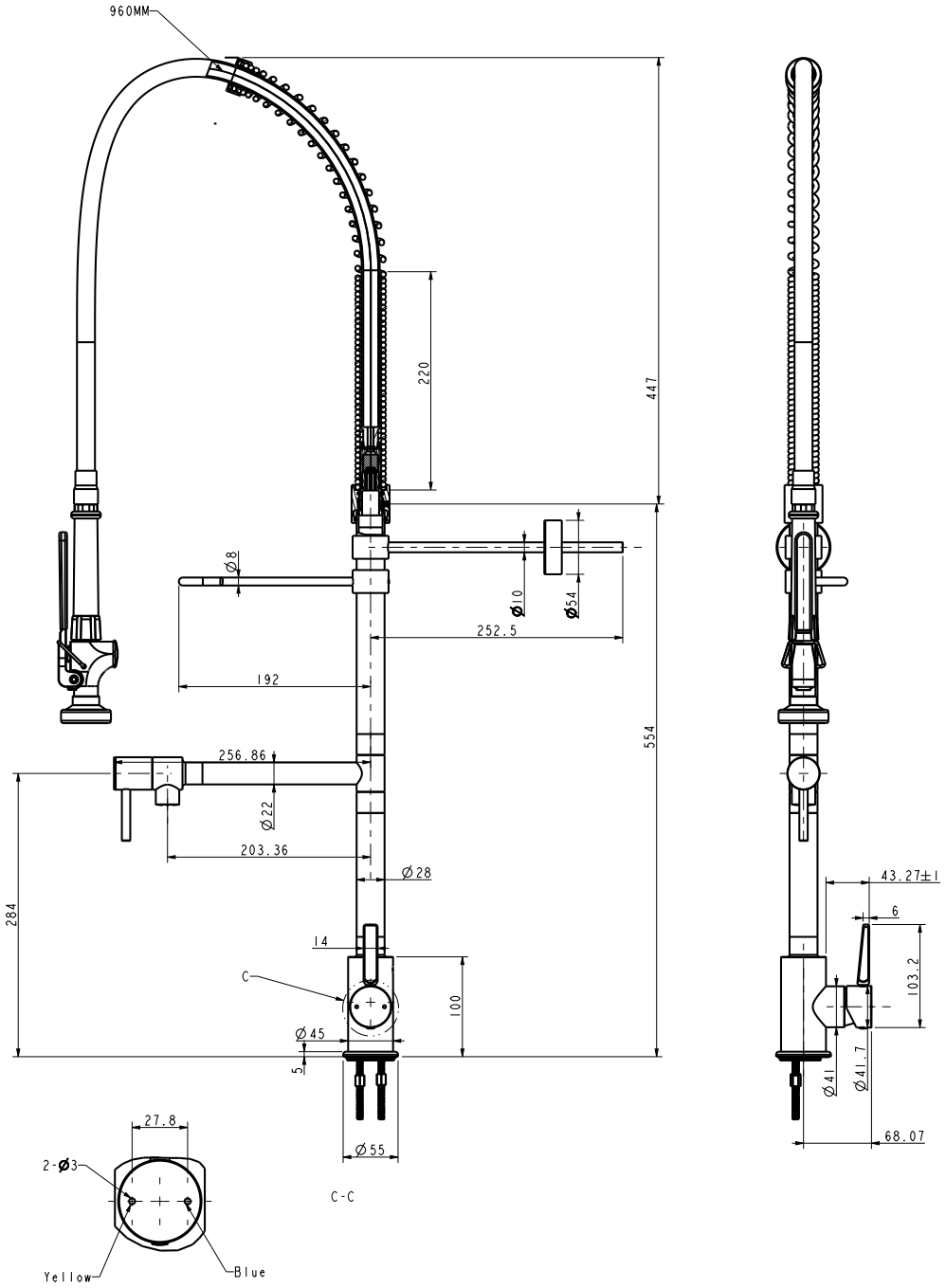

All measurements are in millimetres and should be used as a guide only

JETSTREAM Plumbing

Pre-rinse Unit

JET1500D

Stainless Steel Deck Mounted Pre-rinse Unit with Pot Filler and Dual Handle Mixer

6-star 2.5 lpm
(Nominal Flow : 2.19 lpm)



Product Features

- Lead Free
- Soft Close Operation
- One cartridge used across the Jetstream Food Service range for easy maintenance
- The soft, easy-to-clean hose provides flexibilityandease-of-use
- Soft spring for easy operation
- Double Check Valve
- (SS316) PEX inlet hoses
- Durable stainless steel blade spray for convenient cleaning
- Recommended for commercial kitchens

Technical Information

Materials	Stainless Steel (SS304)
Cartridge	Self closing / Ceramic Disk
Cartridge Size	15mm
Inlet	15 mm Female Flexible Connections (G1/2" BSP)
Outlet	Blade Spray / Laminar Flow
Working Pressures Recommended	150kPa-500kPa
Working Pressures	350kPa
Working Temperatures	5°C - 80°C
Finish / Colour	Brushed Stainless Steel

Product Certifications



WaterMark
AS/NZS 3718: 2005
Licence No. WM 74827
ApprovalMark

Technical Drawings

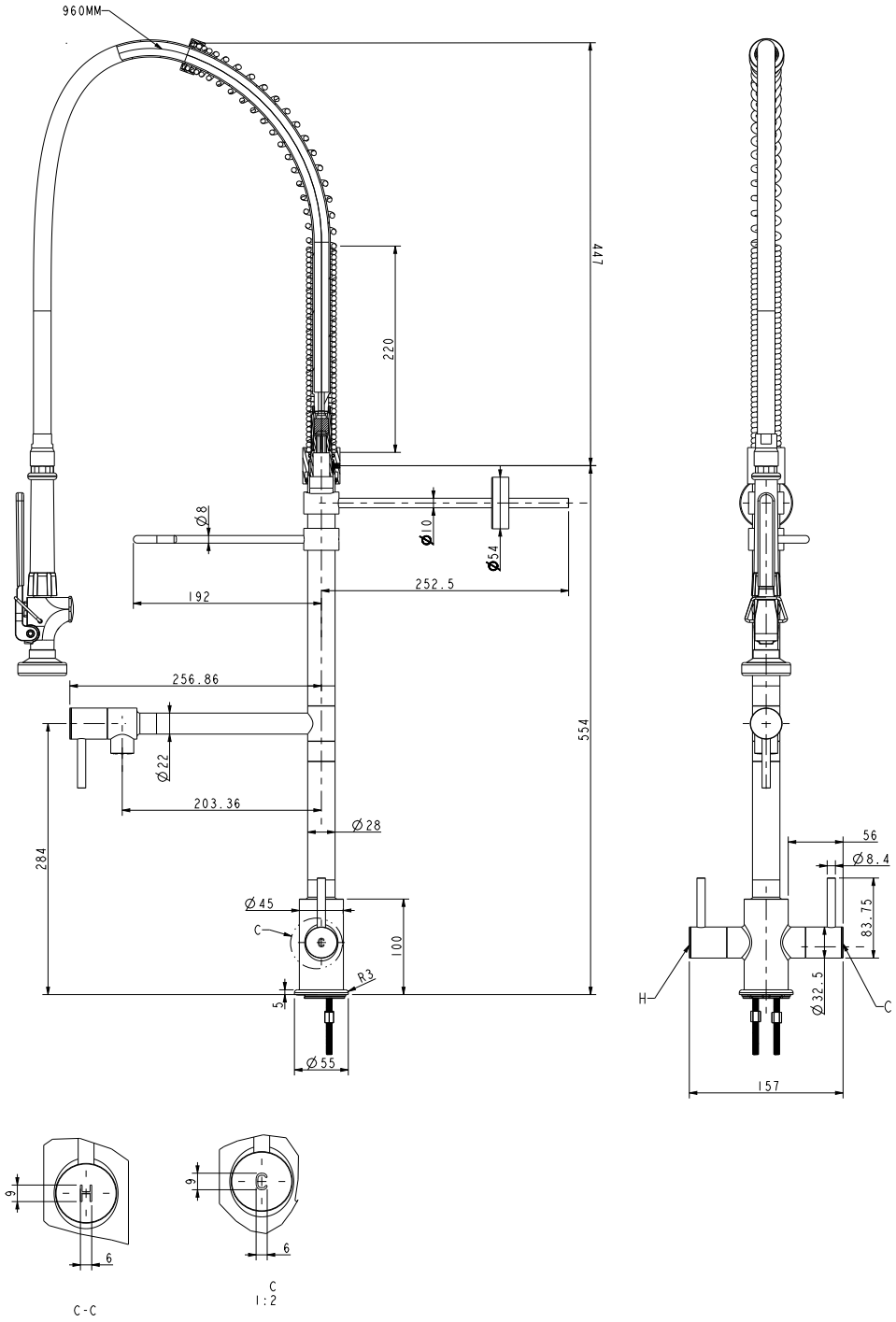

All measurements are in millimetres and should be used as a guide only

JETSTREAM Plumbing

Pre-rinse Unit



JET1500DLH

Stainless Steel Low Height Deck Mounted Pre-rinse Unit with Pot Filler and Dual Handle Mixer

6-star 2.5 lpm
(Nominal Flow : 2.19 lpm)

Product Features

- Lead Free
- Soft Close Operation
- One cartridge used across the Jetstream Food Service range for easy maintenance
- The soft, easy-to-clean hose provides flexibilityandease-of-use
- Soft spring for easy operation
- Double Check Valve
- (SS316) PEX inlet hoses
- Durable stainless steel blade spray for convenient cleaning
- Recommended for commercial kitchens

Technical Information

Materials	Stainless Steel (SS304)
Cartridge	Self closing / Ceramic Disk
Cartridge Size	15mm
Inlet	15 mm Female Flexible Connections
Outlet	(G1/2" BSP)
Working Pressures Recommended	Blade Spray / Laminar Flow
Working Pressures	150kPa-500kPa
Working Temperatures	350kPa
Finish / Colour	5°C - 80°C
	Brushed Stainless Steel

Product Certifications

The more stars the more water efficient
WATER RATING
www.waterrating.gov.au
2.5 litres per minute
(spray tap)
In accordance with AS/NZS 6400
Licence No. 1334
GENTEC AUSTRALIA
Second outlet
5 star
5.5 litres per minute

WaterMark
AS/NZS 3718: 2005
Licence No. WM 74827
ApprovalMark

Technical Drawings

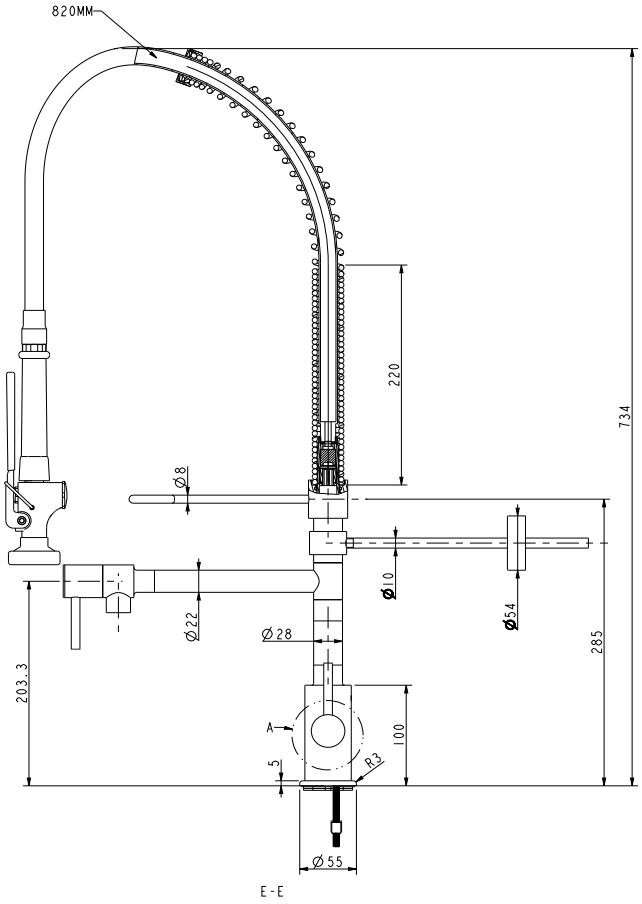

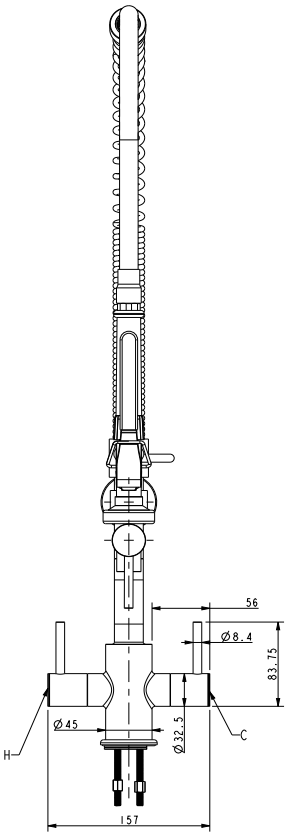

All measurements are in millimetres and should be used as a guide only

JETSTREAM Plumbing



Pre-rinse Unit

JET1500W

Wall Mounted Pre-rinse Unit with Pot Filler, Exposed Mixing Breech and 100mm Lever Handles

6 star 3.0 lpm
(Nominal Flow : 2.74 lpm)

Product Features

- Trigger spray is 6 Star 3lpm
- Jet spray in the trigger spray is created with a stainless-steel blade that retains its shape for longer and provides an easier clean with less water use
- The soft, easy-clean hose provides flexibility and makes using the trigger spray easier
- Soft spring for easy operation
- Adjustable wall bracket
- Double-check valve
- Recommended for Commercial Kitchens

Technical Information

Materials	DZR Brass Blade Spray: Stainless Steel
Cartridge	Ceramic Disk / Self Closing
Cartridge size	15 mm
Inlet	15mm Female (G 1/2" BSP)
Outlet	Blade Spray / Aerated Flow
Working Pressures	150kPa-500kPa
Recommended Working Pressures	350kPa
Working Temperatures	5°C - 80°C
Finish / Colour	Body: Chrome Plated
Finish / Colour 2	Trigger Handle: Plastic Coated

Product Certifications

WATER RATING
www.waterrating.gov.au
3.0 litres per minute (spray tap)
Licence No. 1334
Second outlet 5 star 5.0 litres per minute

WaterMark
AS/NZS 3718: 2005
Licence No. WMKA25617
SAI GLOBAL

Technical Drawings

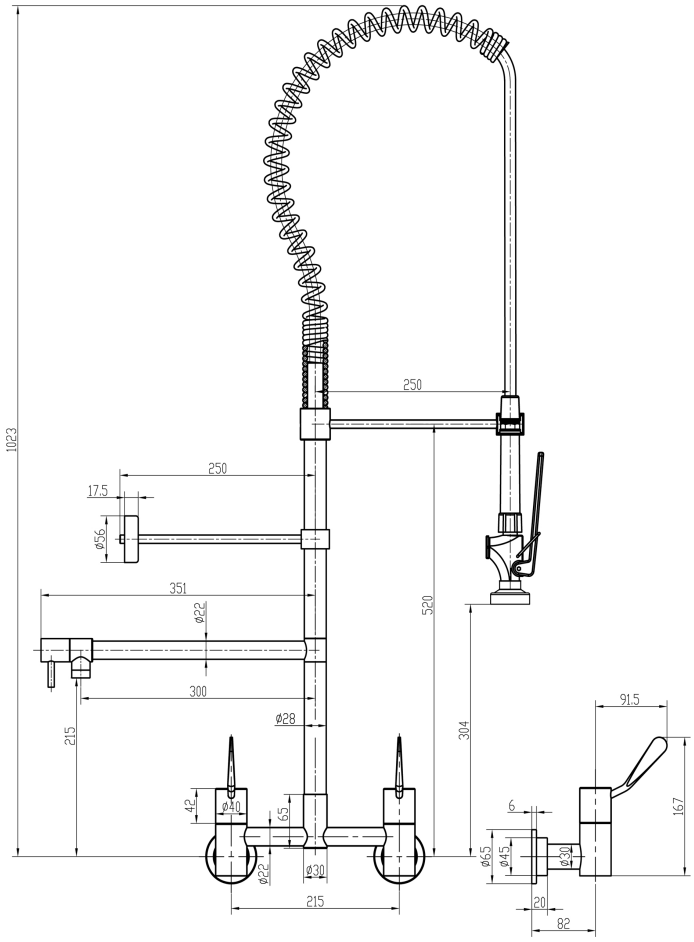

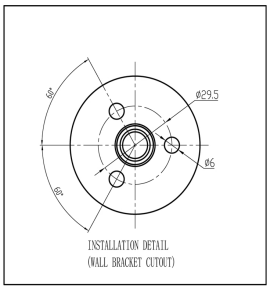

All measurements are in millimetres and should be used as a guide only

JETSTREAM Plumbing



Pre-rinse Unit

JET1500WCB

Wall Mounted Pre-rinse Unit with Pot Filler, Recess Adaptors and 100mm Lever Handles

6 star 3.0 lpm
(Nominal Flow : 2.74 lpm)

Product Features

- Trigger spray is 6 Star 3lpm
- Jet spray in the trigger spray is created with a stainless-steel blade that retains its shape for longer and provides an easier clean with less water use
- The soft, easy-clean hose provides flexibility and makes using the trigger spray easier
- Soft spring for easy operation
- Adjustable wall bracket
- Double-check valve
- Shower Spray available
- Recommended for Commercial Kitchens

Technical Information

Materials	DZR Brass Blade Spray: Stainless Steel
Cartridge	Ceramic Disk / Self Closing
Cartridge size	15mm
Inlet	15mm (G 1/2" BSP)
Outlet	Blade Spray / Aerated Flow
Working Pressures	150kPa-500kPa
Recommended Working Pressures	350kPa
Working Temperatures	5°C - 80°C
Finish / Colour	Body: Chrome Plated
Finish / Colour 2	Trigger Handle: Plastic Coated

Product Certifications

WATER RATING
www.waterrating.gov.au
3.0 litres per minute (spray tap)
Licence No. 1334
Second outlet 5 star 5.0 litres per minute

WaterMark
AS/NZS 3718: 2005
Licence No. WMKA25617
SAI GLOBAL

Technical Drawings

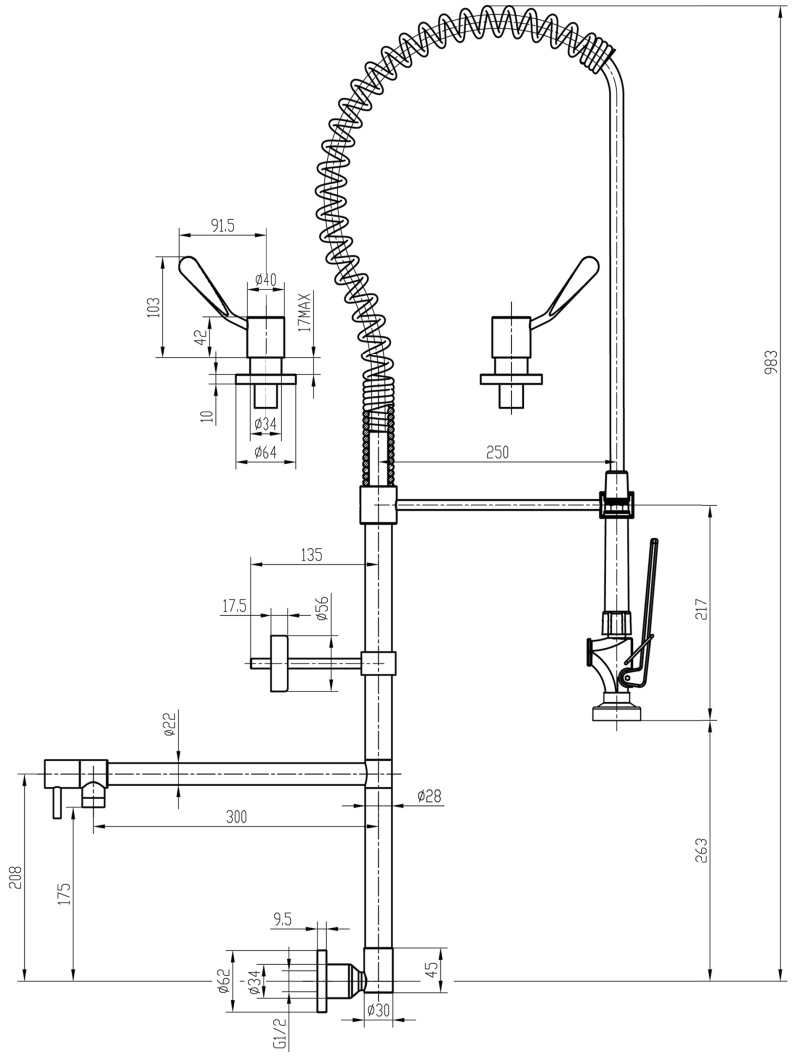

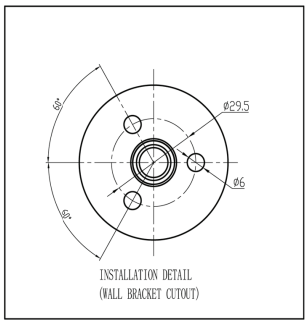

All measurements are in millimetres and should be used as a guide only

JETSTREAM Plumbing

Lever Mixing Set



JET1836W

Wall Mounted Exposed Mixing Set with 165mm Fixed Parallel Spout, Bucket Hook and 100mm Lever Handles

5 star 5.5 lpm
(Nominal Flow : 5.3 lpm)

Product Features

- No crevices to eliminate bacterial build-up
- Red, Yellow & Blue button indicators supplied
- Soft seal, easy action ceramic disk cartridge
- Allen key fixings for secure handles and outlets
- Concentric bases for easier installation
- Recommended for use in health and aged care projects

Technical Information

Materials	Body: DZR Brass Handle: Zinc Alloy
Cartridge	Ceramic Disk (Quarter Turn)
Cartridge Size	15mm
Inlet	15mm Female (G 1/2" BSP)
Outlet	Aerated Flow
Working Pressures	50kPa-500kPa
Recommended Working Pressures	350kPa
Working Temperatures	5°C - 80°C
Finish / Colour	Chrome Plated

Product Certifications

The more stars the more water efficient
WATER RATING
www.waterrating.gov.au
5.5 litres per minute
In accordance with AS/NZS 6400
Licence No. 1334
GENTEC AUSTRALIA

WaterMark
AS/NZS 3718: 2005
Licence No. WMKA25617
SAI GLOBAL

Technical Drawings

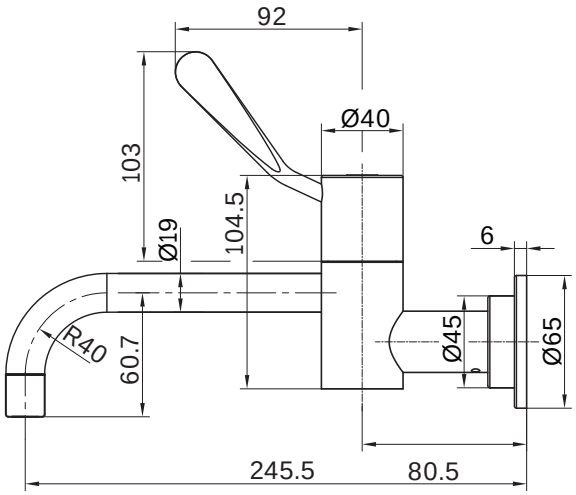

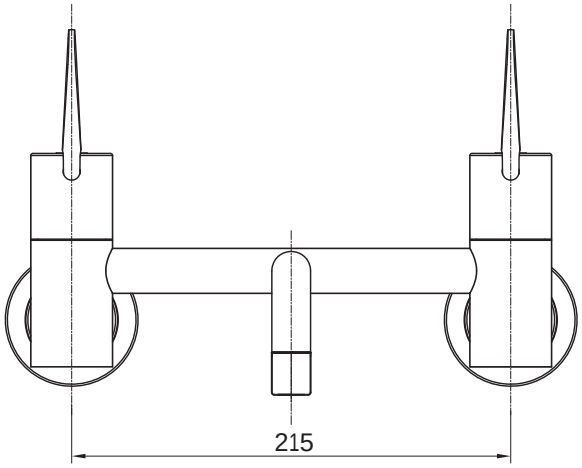

All measurements are in millimetres and should be used as a guide only

JETSTREAM Plumbing

Electronic Sensor Tap



JET2500W

Stainless Steel Wall Mounted Electronic Tap with Laser Sensor and Battery & Mains Power

6-star 6.0 lpm
(Nominal Flow : 6.0 lpm)

Product Features

- Advanced laser sensor technology provides precision, consistency and with variable programming. This avoids nuisance triggering and activates on all skin tones
- 100% Lead-Free
- Sensor range is adjustable post installation without the use of tools
- IP67 rated control box enclosure houses the solenoid valve and waterproof connections
- Extension leads available for either power or sensor (not both simultaneously)
- Integral line strainer minimises fouling by debris
- Both battery and mains power options available (Configuration can be changed following installation)
- Factory-set runtime, sensitivity and hygiene flush options available
- Hygiene flush programming minimises the risk of Legionella from infrequently used fixtures
- All waterways are smooth bored for improved infection control
- Recommended for all types projects

Technical Information

Materials	Body: Stainless Steel (SS316) Solenoid Valve: Engineering Grade Plastic
Cartridge	Solenoid Valve 6 Volt Solenoid 15m
Cartridge Size	15mm
Inlet	15mm Male (G 1/2" BSP)
Outlet	Laminar Flow
Run time	2 seconds (auto on / off)
Working Pressures	50kPa-500kPa
Recommended Working Pressures	350kPa
Working Temperatures	5°C - 50°C
Finish / Colour	Polished Stainless Steel

Product Certifications

The more stars the more water efficient
WATER RATING
www.waterrating.gov.au
6.0 litres per minute
In accordance with AS/NZS 6400
Licence No. 1334
GENTEC AUSTRALIA

WaterMark
AS/NZS 3718: 2005
Licence No. WM 74827
ApprovalMark

Technical Drawings

Control Box

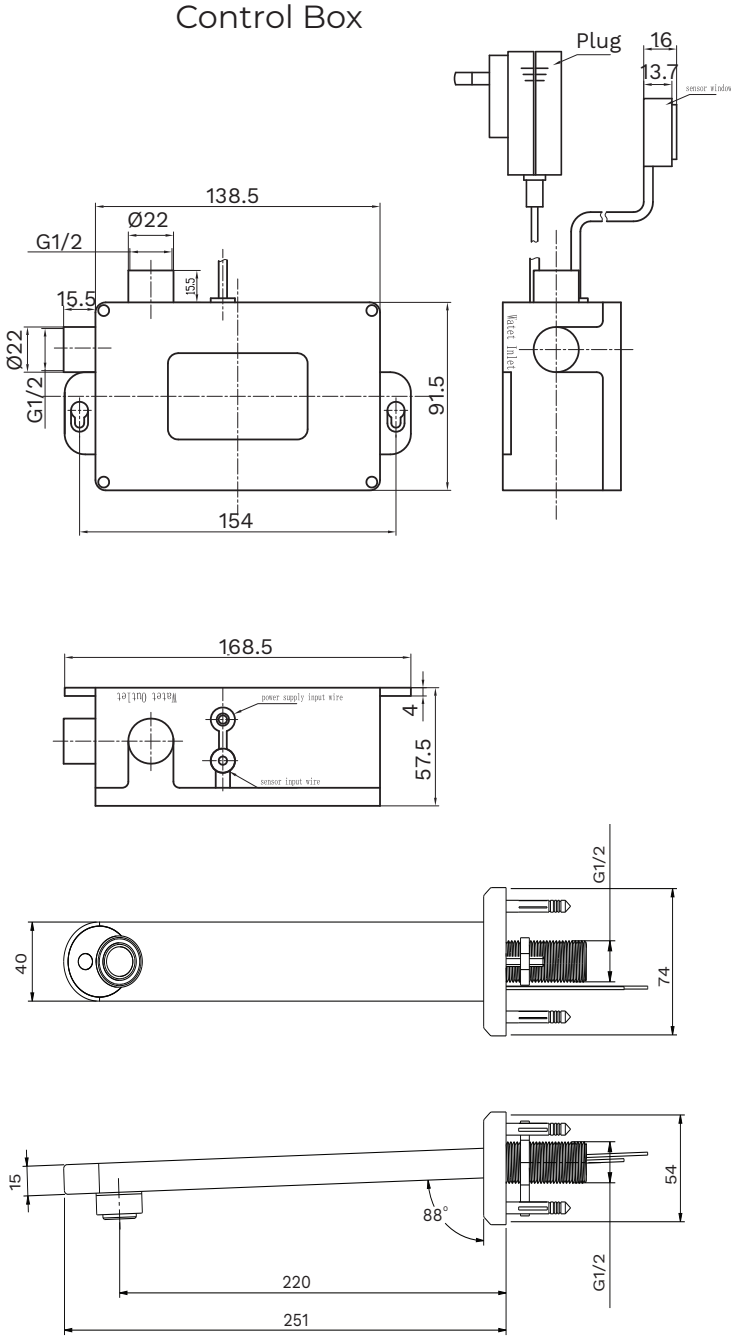

All measurements are in millimetres and should be used as a guide only

JETSTREAM Plumbing

Single Lever Basin Mixer

JET3000D



Stainless Steel Deck Mounted Gooseneck Swivel Sink Mixer with Red & Blue Printed Handle - 4lpm

6 star 3.5 lpm
(Nominal Flow : 2.9 lpm)

Product Features

- Soft close operation
- Printed indicators eliminate crevices for bacteria build up
- Stainless steel can be rejuvenated at any time over the life of the product
- Environmentally friendly, no electroplating processes used throughout the product lifecycle
- Laminar flow to reduce aerosol at the outlet
- Additional flowratesavailable
- Recommended for commercial, health and hospitality projects

Technical Information

Materials	Body: Stainless Steel (SS304) Handle: Stainless Steel (SS304)
Cartridge	Ceramic Disk
Cartridge Size	35mm
Inlet	15mm Female Flexible Connections (G1/2" BSP)
Outlet	Laminar Flow
Working Pressures	50kPa-500kPa
Recommended Working Pressures	350kPa
Working Temperatures	5°C - 80°C
Finish / Colour	Brushed Stainless Steel

Product Certifications

WATER RATING
www.waterrating.gov.au
3.5 litres per minute
Licence No. 1334

WaterMark
AS/NZS 3718: 2005
Licence No. WM 74827
ApprovalMark

Technical Drawings

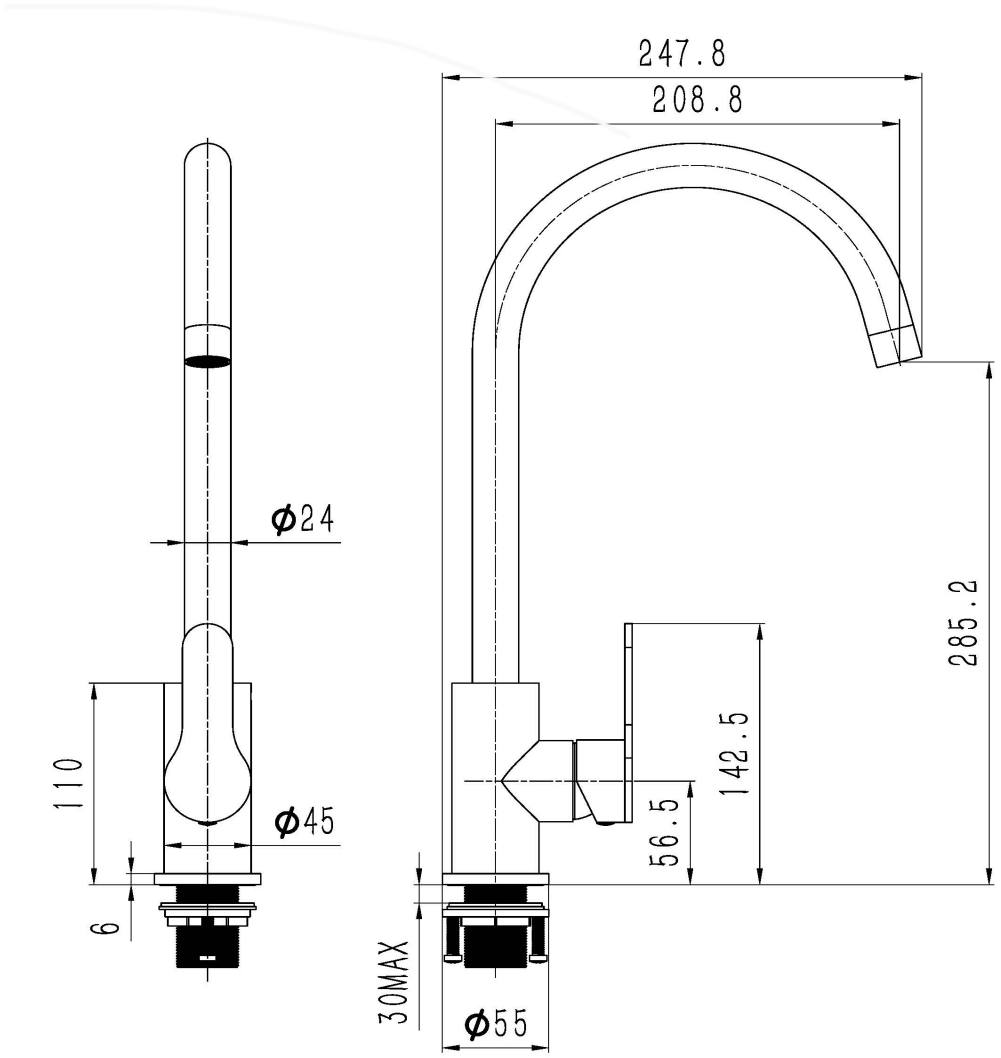

All measurements are in millimetres and should be used as a guide only

JETSTREAM Plumbing



Single Lever Sink Mixer

JET3150D

Deck Mounted Gooseneck Sink Mixer with Dual Handles

4 star 7.5 lpm
(Nominal Flow : 6.43 lpm)

Product Features

- Soft close operation
- Red, yellow & blue indicators provided
- Supplied with PEX inlet hoses
- Recommended for commercial, health and hospitality projects

Technical Information

Materials	Body: DZR Brass Handle: Zinc Alloy
Cartridge	Ceramic Disk
Cartridge Size	15mm
Inlet	15mm Female Flexible Connections (G1/2" BSP)
Outlet	Aerated Flow
Working Pressures	150kPa-500kPa
Recommended Working Pressures	350kPa
Working Temperatures	5°C - 80°C
Finish / Colour	Satin Chrome Plated

Product Certifications

WATER RATING
www.waterrating.gov.au
7.5 litres per minute
Licence No. 1334

WaterMark
AS/NZS 3718: 2005
Licence No. WMKA25617
SAI GLOBAL

Technical Drawings

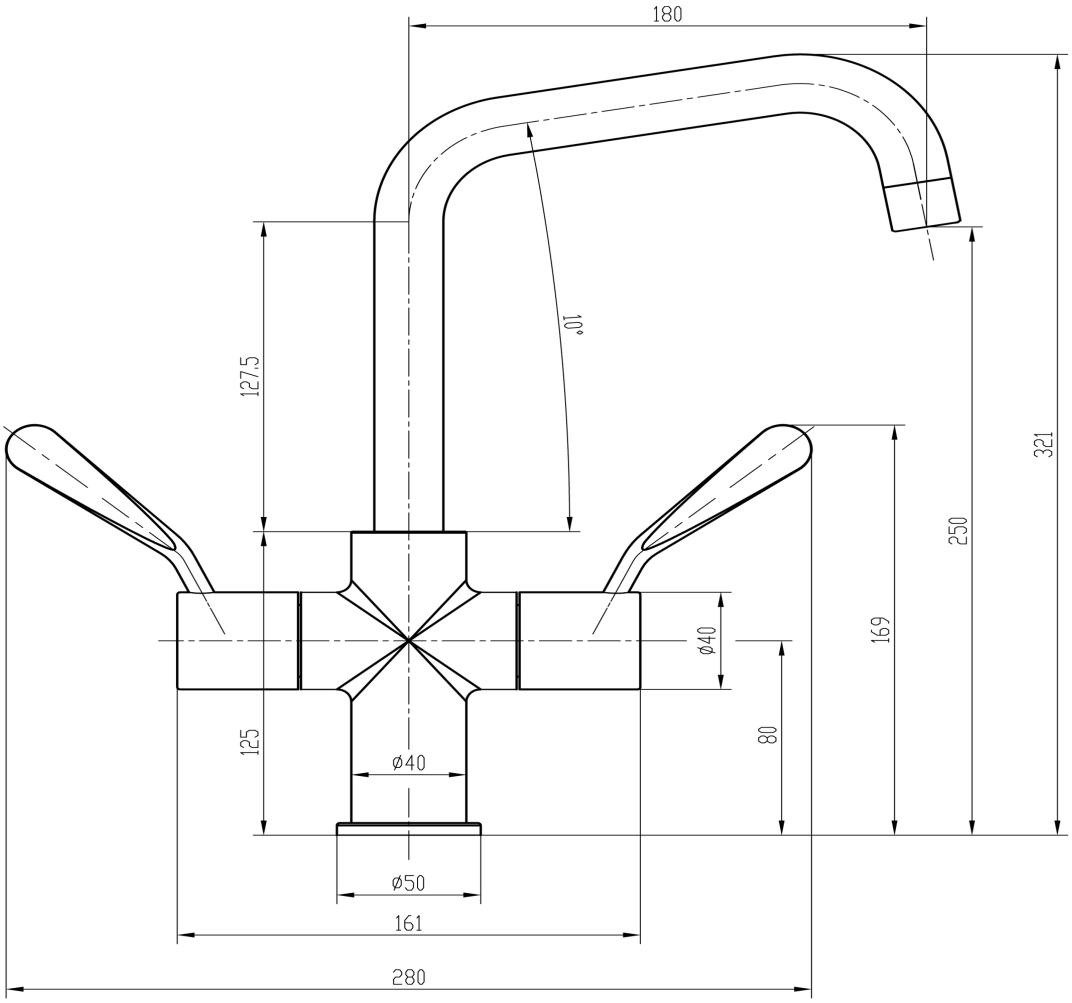

All measurements are in millimetres and should be used as a guide only

JETSTREAM Plumbing



Lever Sink Set

JET3180DCB

Deck Mounted Sink Set with 180mm Square Swivel Spout and 100mm Lever Handles

4 star 7.5 lpm
(Nominal Flow : 7.25 lpm)

Product Features

- No crevices to eliminate bacterial build-up
- Red, Yellow & Blue button indicators supplied
- Soft seal, easy action ceramic disk cartridge
- Allen key fixings for secure handles and outlets
- Product customisation available
- Recommended for use in health and aged care projects

Technical Information

Materials	Body: DZR Brass Handle: Zinc Alloy
Cartridge	Ceramic Disk (Quarter Turn)
Cartridge Size	15mm
Inlet	15mm (G 1/2" BSP)
Outlet	Aerated Flow
Working Pressures	50kPa-500kPa
Recommended Working Pressures	350kPa
Working Temperatures	5°C - 80°C
Finish / Colour	Satin Chrome Plated

Product Certifications

The more stars the more water efficient
WATER RATING
www.waterrating.gov.au
7.5 litres per minute
In accordance with AS/NZS 6400
Licence No. 1334
GENTEC AUSTRALIA

WaterMark
AS/NZS 3718: 2005
Licence No. WMKA25617
SAI GLOBAL

Technical Drawings

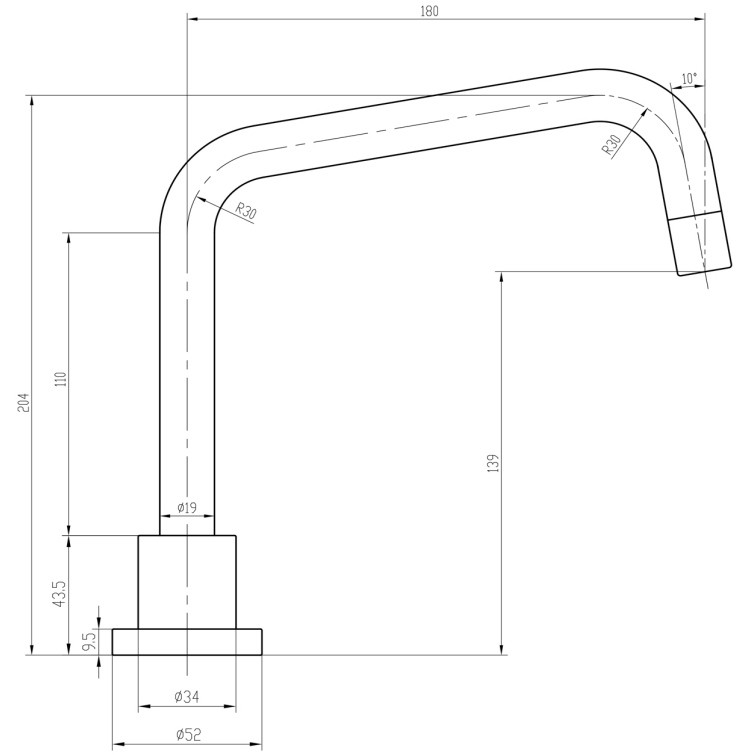

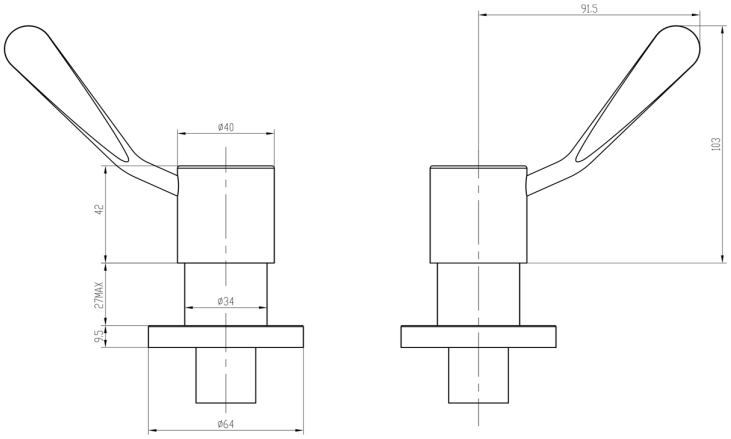

All measurements are in millimetres and should be used as a guide only

JETSTREAM Plumbing

Lever Sink Set

JET3300DCB

Deck Mounted Sink Set with 300mm Square Swivel Spout and 100mm Lever Handles

4 star 7.5 lpm
(Nominal Flow : 7.25 lpm)



Product Features

- No crevices to eliminate bacterial build-up
- Red, Yellow & Blue button indicators supplied
- Soft seal, easy action ceramic disk cartridge
- Allen key fixingsforsecurehandles and outlets
- Recommended for use in health and aged care projects

Technical Information

Materials	Body: DZR Brass Handle: Zinc Alloy
Cartridge	Ceramic Disk (Quarter Turn)
Cartridge Size	15mm
Inlet	15mm (G 1/2" BSP)
Outlet	Aerated Flow
Working Pressures	50kPa-500kPa
Recommended Working Pressures	350kPa
Working Temperatures	5°C - 80°C
Finish / Colour	Satin Chrome Plated

Product Certifications

The more stars the more water efficient
WATER RATING
www.waterrating.gov.au
7.5 litres per minute
In accordance with AS/NZS 6400
Licence No. 1334
GENTEC AUSTRALIA

WaterMark
AS/NZS 3718: 2005
Licence No. WMKA25617
SAI GLOBAL

Technical Drawings

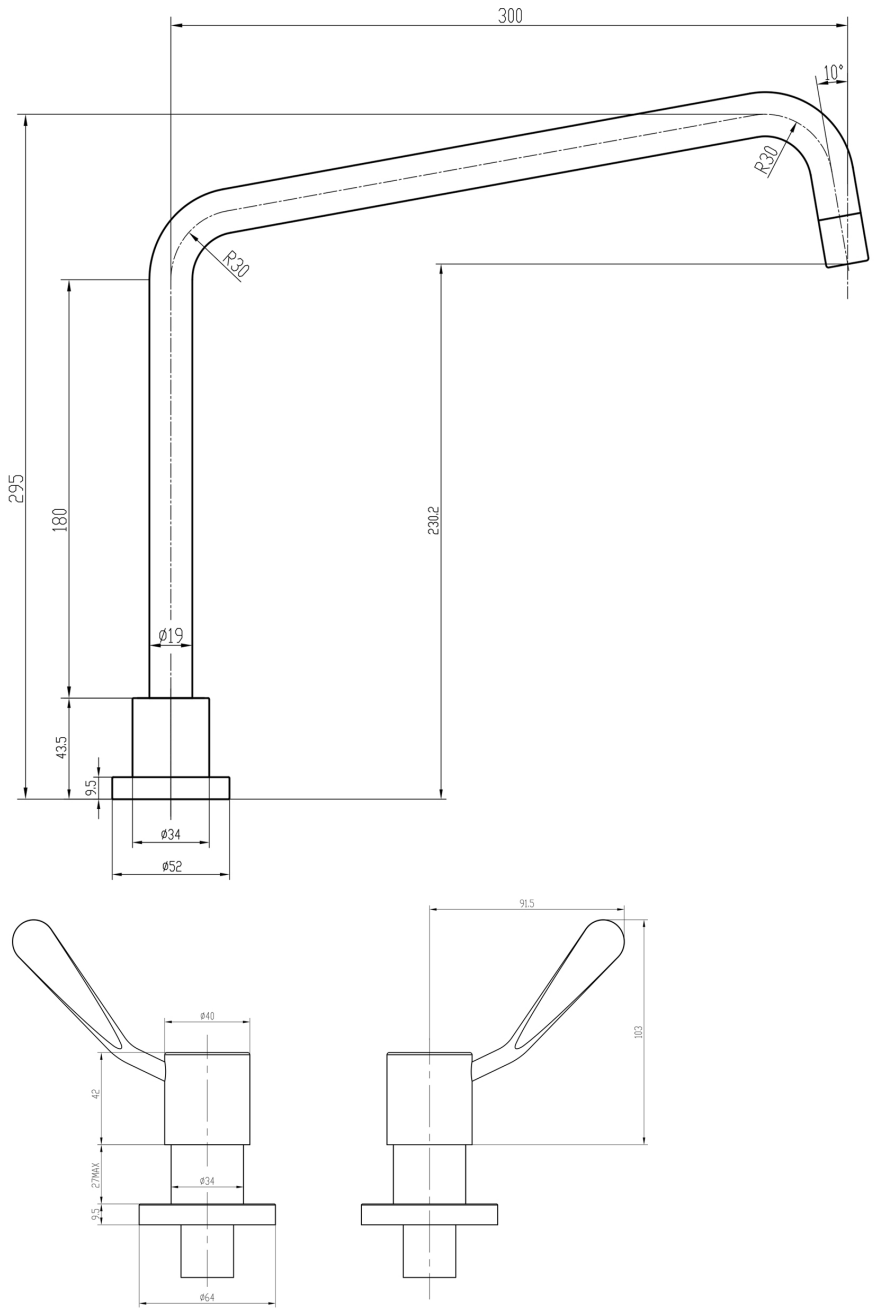

All measurements are in millimetres and should be used as a guide only

JETSTREAM Plumbing

Lever Mixing Set



JET3300WCB

Wall Mounted Concealed Mixing Set with 300mm Square Swivel Spout and 100mm Lever Handles

4 star 7.5 lpm
(Nominal Flow : 7.37 lpm)

Product Features

- No crevices to eliminate bacterial build-up
- Red, Yellow & Blue button indicators supplied
- Soft seal, easy action ceramic disk cartridge
- Allen key fixingsforsecurehandles and outlets
- Recommended for use in health and aged care projects

Technical Information

Materials	Body: DZR Brass Handle: Zinc Alloy
Cartridge	Ceramic Disk (Quarter Turn)
Cartridge Size	15mm
Inlet	15mm (G 1/2" BSP)
Outlet	Aerated Flow
Working Pressures	50kPa-500kPa
Recommended Working Pressures	350kPa
Working Temperatures	5°C - 80°C
Finish / Colour	Satin Chrome Plated

Product Certifications

WATER RATING
www.waterrating.gov.au
7.5 litres per minute
Licence No. 1334

WaterMark
AS/NZS 3718: 2005
Licence No. WMKA25617
SAI GLOBAL

Technical Drawings

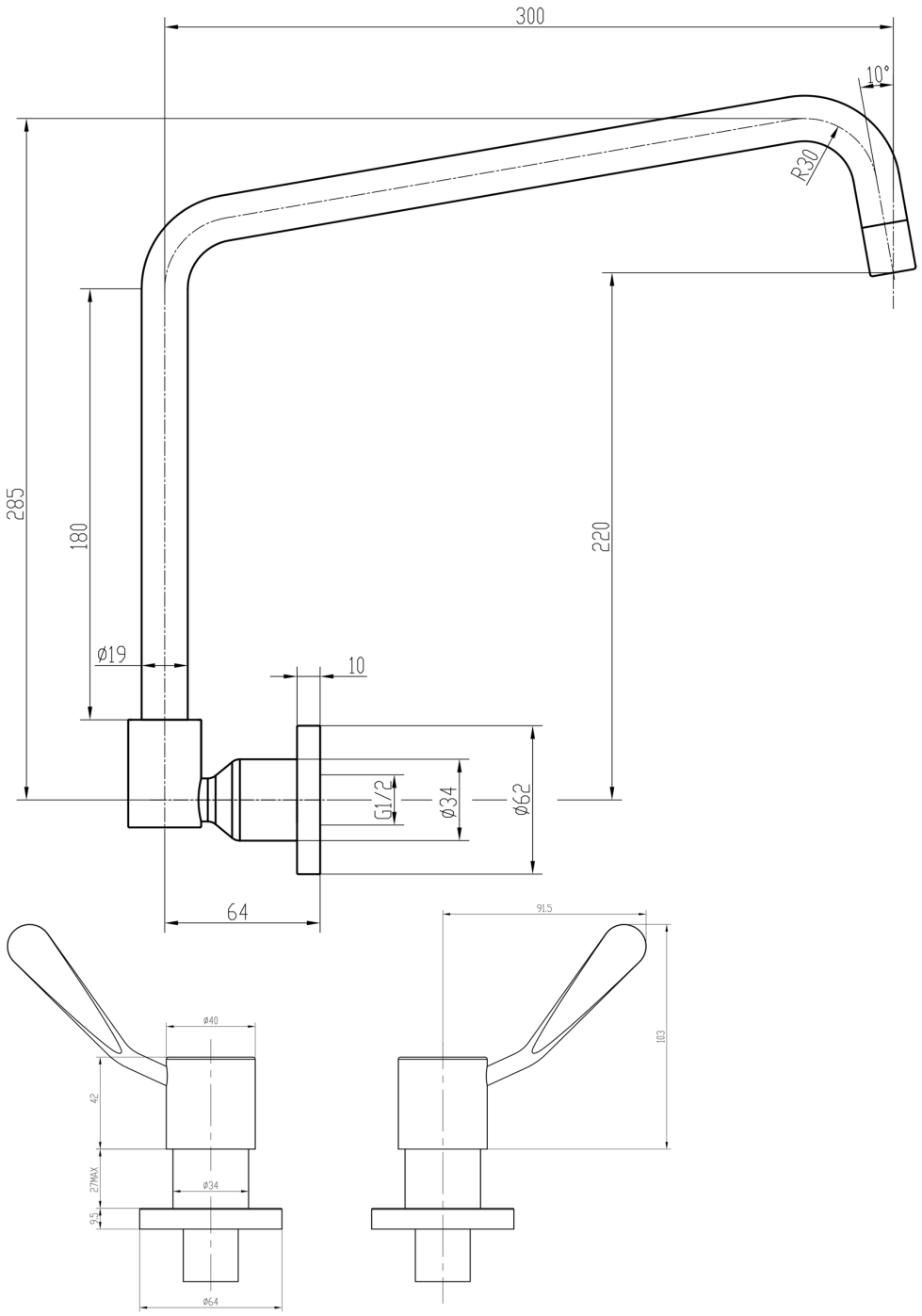

All measurements are in millimetres and should be used as a guide only

JETSTREAM Plumbing



JET4001D

Deck Mounted Right Angle Electronic Tap with Infrared Sensor and Battery & Mains Power

6-star 6.0 lpm
(Nominal Flow : 6.0 lpm)

Product Features

- Digital sensor technology; Sensor range, run timing and hygiene flush programming are adjustable post installation with the use of remote controls (sold separately)
- Extension leads available for both power and sensor
- IP67 rated cotrol box houses the solenoid valve and waterproof connection
- Integral strainer minimises fouling by debris
- Both battery and mains power options available (Configuration can be changed following installation)
- Hygiene flushprogramming the risk of Legionella from infrequently used fixtures
- Recommended for all types of projects
- Product costomisation available

Technical Information

Materials Engineering	Solenoid Valve: Grade Plastic Body: DZR Brass
Cartridge	Solenoid Valve
Cartridge Size	15mm
Inlet	15mm Female Flexible Connections (G1/2" BSP)
Outlet	Aerated Flow
Run time	2 seconds (auto on / off)
Working Pressures	50kPa-500kPa
Recommended Working Pressures	350kPa
Working Temperatures	5°C - 50°C
Finish / Colour	Chrome Plated
Warranty	2years

Product Certifications

WATER RATING
www.waterrating.gov.au
6.0 litres per minute
Licence No. 1334

WaterMark
AS/NZS 3718: 2005
Licence No. WMKA25617
SAI GLOBAL

Technical Drawings

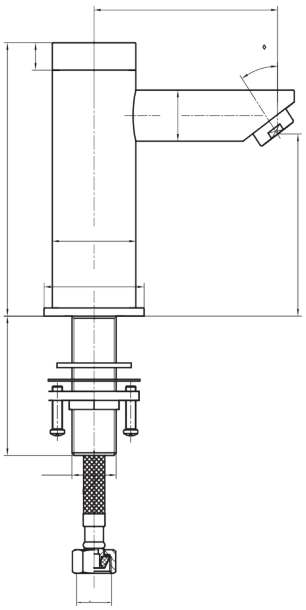

Control Box

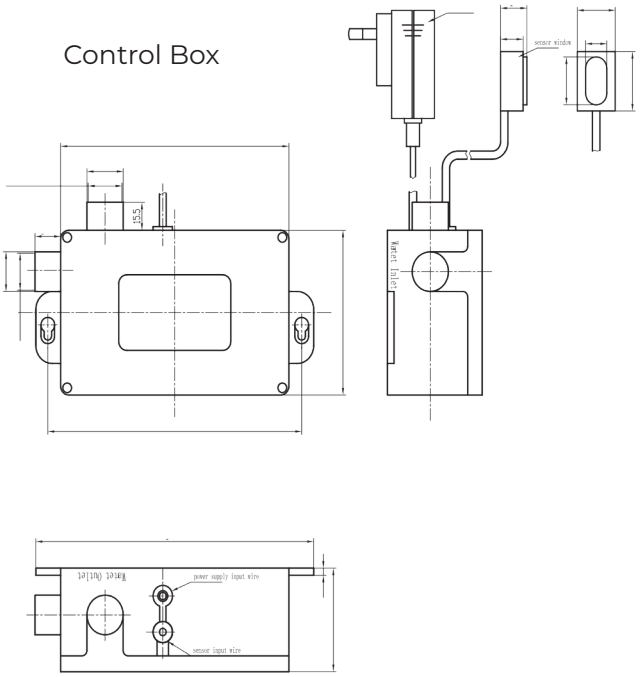

All measurements are in millimetres and should be used as a guide only

JETSTREAM Plumbing



Single Lever Basin Mixer

JET5100D

Stainless Steel Deck Mounted Basin Mixer with Red & Blue Printed Handle - 4lpm

6 star 3.5 lpm
(Nominal Flow : 3.03 lpm)

Product Features

- Soft close operation
- Printed indicators eliminate crevices for bacteria build up
- Stainless steel can be rejuvenated at any time over the life of the product
- Environmentally friendly, no electroplating processes used throughout the product lifecycle
- Laminar flow to reduce aerosol at the outlet
- Recommended for commercial, health and hospitality projects
- Lead free

Technical Information

Materials	Body: Stainless Steel (SS304) Handle: Stainless Steel (SS304)
Cartridge	Ceramic Disk
Cartridge Size	35mm
Inlet	15 mm Female Flexible Connections (G1/2" BSP)
Outlet	Laminar Flow
Working Pressures	50kPa-500kPa
Recommended Working Pressures	350kPa
Working Temperatures	5°C - 80°C
Finish / Colour	Brushed Stainless Steel
Warranty	5 years*

Product Certifications

WATER RATING
www.waterrating.gov.au
3.5 litres per minute
Licence No. 1334

WaterMark
AS/NZS 3718: 2005
Licence No. WM 74827
ApprovalMark

Technical Drawings

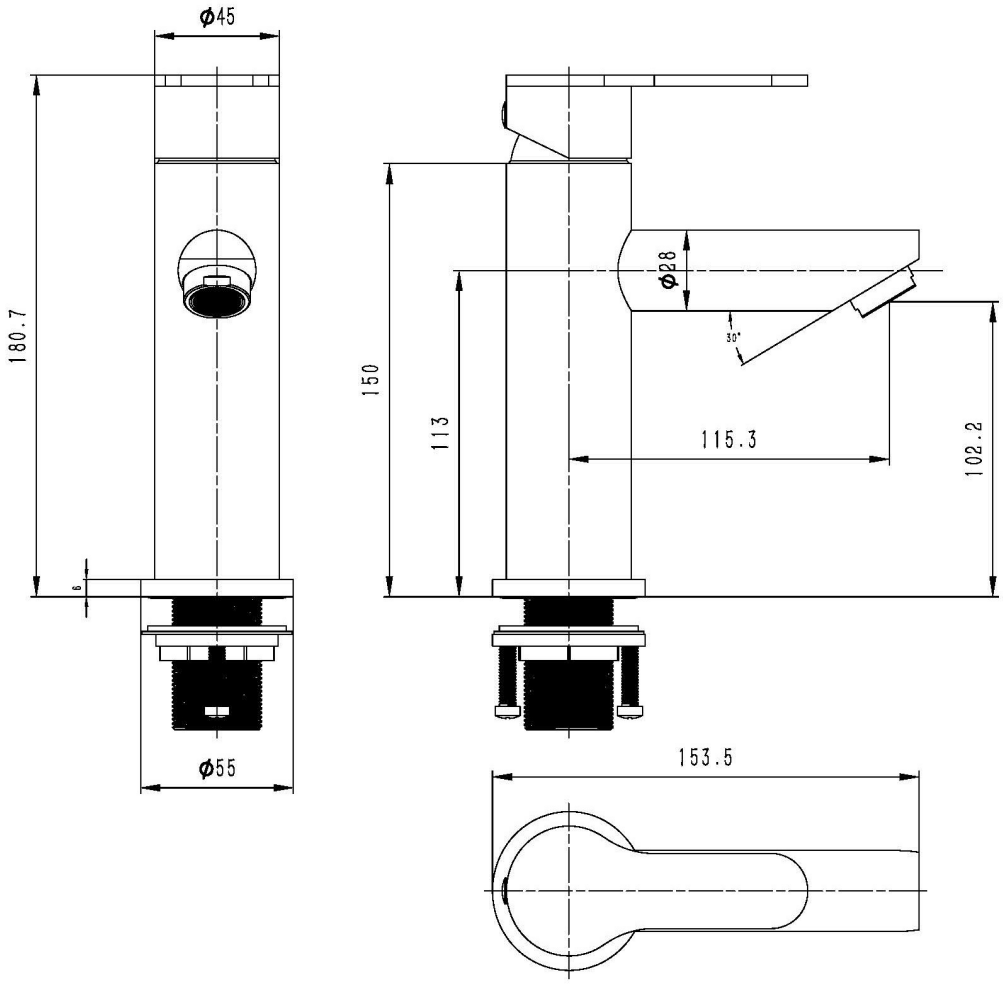

All measurements are in millimetres and should be used as a guide only

JETSTREAM Plumbing

Single Lever Basin Mixer



JET5200D

Stainless Steel Deck Mounted Low Line Swivel Sink Mixer with Red & Blue Printed Handle - 4lpm

6 star 3.5 lpm
(Nominal Flow : 3.05 lpm)

Product Features

- Soft close operation
- Printed indicators eliminate crevices for bacteria build up
- Stainless steel can be rejuvenated at any time over the life of the product
- Environmentally friendly, no electroplating processes used throughout the product lifecycle
- Laminar flow to reduce aerosol at the outlet
- Additional flow rates available
- Recommended for commercial, health and hospitality projects
- Product customisation available

Technical Information

Materials	Body: Stainless Steel (SS304) Handle: Stainless Steel (SS304)
Cartridge	Ceramic Disk
Cartridge Size	35mm
Inlet	15 mm Female Flexible Connections (G1/2" BSP)
Outlet	Laminar Flow
Working Pressures	50kPa-500kPa
Recommended Working Pressures	350kPa
Working Temperatures	5°C - 80°C
Finish / Colour	Brushed Stainless Steel
Warranty	5 years*

Product Certifications

WATER RATING
www.waterrating.gov.au
3.5 litres per minute
Licence No. 1334

WaterMark
AS/NZS 3718: 2005
Licence No. WM 74827
ApprovalMark

Technical Drawings

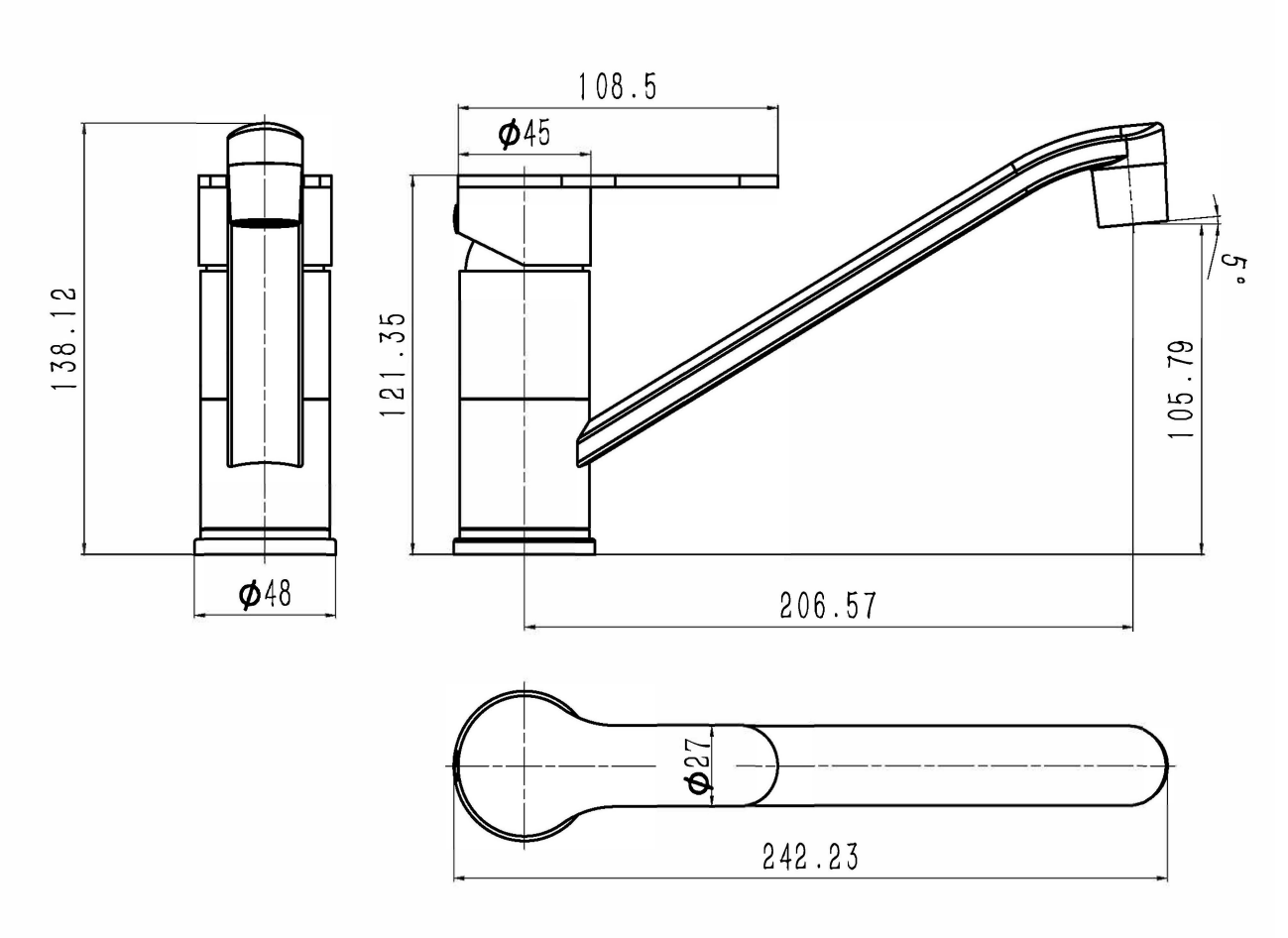

All measurements are in millimetres and should be used as a guide only

JETSTREAM Plumbing

Thermostatic Mixing Valve

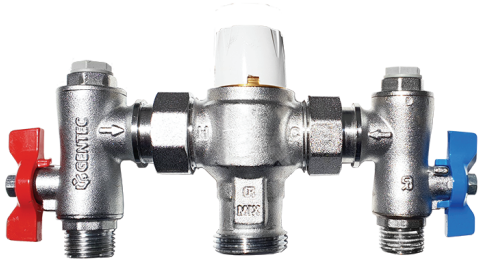

JET6000

NSW Health Approved Thermostatic Mixing Valve with Strainers, Isolation and Non Return Valves

Product Features

- NSW Health approved
- In-built hygiene flush
- Can support up to 6 connections (depending on flow rate)
- High performing / high flow rates - 54lpm at 500kpa
- Easy, low cost maintenance requirements
- Removable strainers and isolation points in the hot and cold sections allow for easy maintenance
- Recommended for any project

Technical Information

Materials	DZR Brass
Cartridge	Mechanical / Wax Element
Cartridge Size	N/A
Inlet	15mm Male (G 1/2" BSP)
Outlet	20mm Male (G 3/4" BSP) - 15mm Male (G 1/2" BSP) Adaptor provided
Working Pressures	50kPa-500kPa
Recommended Working Pressures	350kPa
Minimum Outlet Flow Rate	4lpm
Finish / Colour	Chrome Plated
Warranty	5 years*
Mixed Outlet Tempera-ture	35°C - 50°C
Hot Inlet Temperature	Min 55°C - Max 80°C
Cold Inlet Temperature: Min	5°C - Max 30°C
Max Differential Inlet Pressure	10:1 Ratio

Product Certifications

WaterMark
AS 4032.1-2005
Licence No.WM 74512
ApprovalMark

Technical Drawings

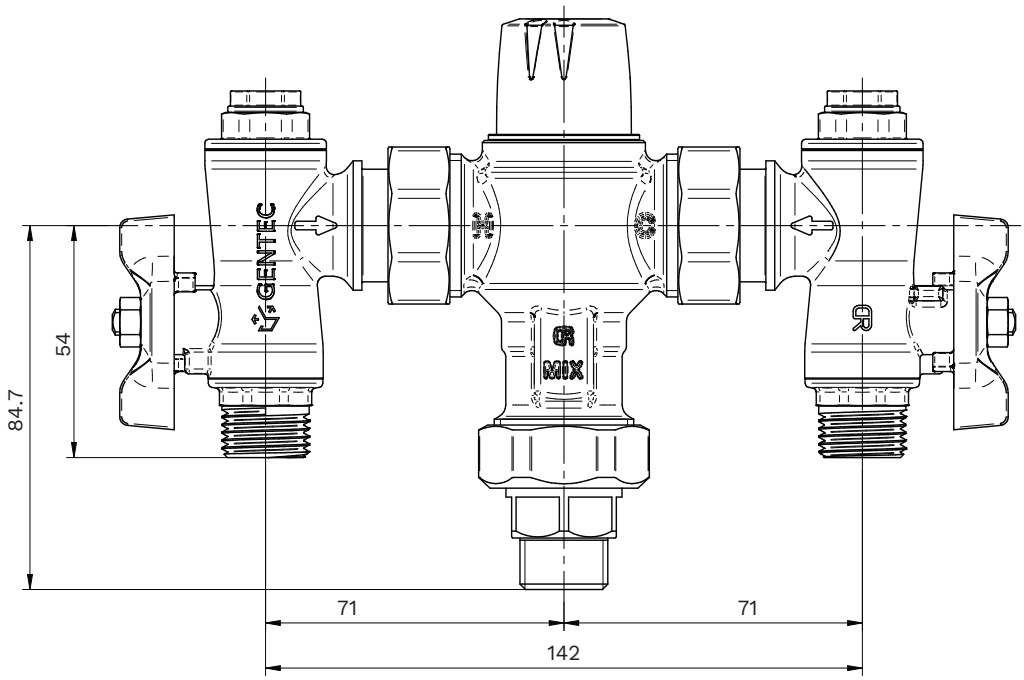

All measurements are in millimetres and should be used as a guide only

JETSTREAM
Plumbing



Timed Flow Pillar Tap

JET7500D

Stainless Steel Deck Mounted Angled Single Temperature Timed Flow Pillar Tap

6-star 4 lpm
(Nominal Flow : 3.45 lpm)

Product Features

- Lead Free
- Soft-close, hydraulically operated time flow means that it's suitable for all markets
- Designed to be durable and anti-vandal. Suitable for use in public areas
- One service kit for easy maintenance
- Supplied with inlet strainer and flow controller
- Red, Yellow & Blue button indicators supplied
- Run time is easily changeable post installation
- Recommended for commercial and public projects
- Product customisation available

Technical Information

Materials	Stainless Steel (SS316)
Cartridge	Timed Flow (Hydraulic)
Cartridge Size	15 mm
Inlet	15 mm Female Flexible Connections (G1/2" BSP)
Outlet	Laminar Flow
Run time	0-20 (+/-5) seconds (Adjustable)
Working Pressures	150kPa-500kPa
Recommended Working Pressures	350kPa
Working Temperatures	5°C - 50°C
Finish / Colour	Polished Stainless Steel
Warranty	10 years*

Product Certifications

WATER RATING
www.waterrating.gov.au
4.0 litres per minute
Licence No. 1334

WaterMark
AS/NZS 3718: 2005
Licence No. WM 74827
ApprovalMark

Technical Drawings

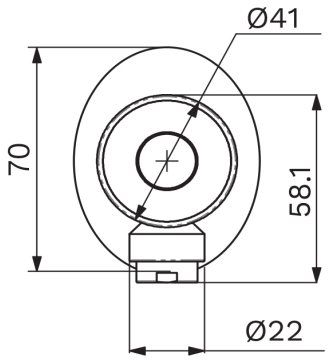

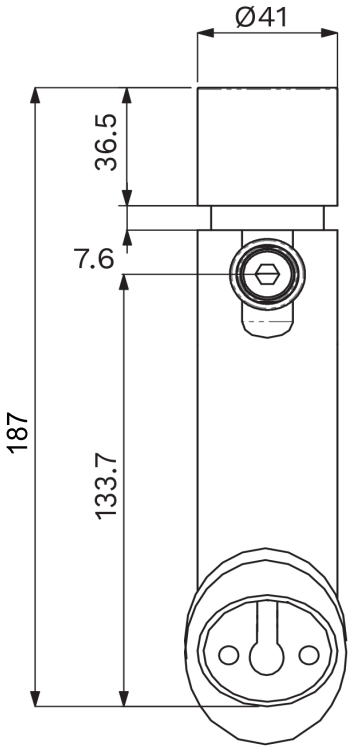

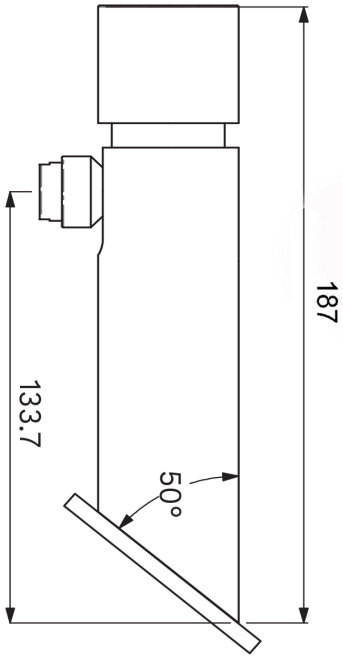

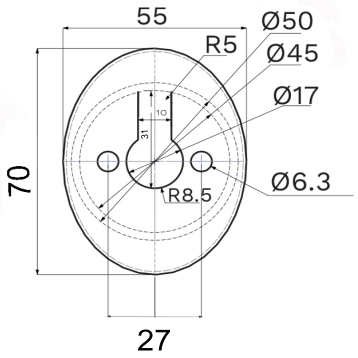

All measurements are in millimetres and should be used as a guide only

JET8000

JETSTREAM Plumbing

Paper Towel Dispenser

Description

Stainless Steel Paper Towel Dispenser

Product Information

Technical Information

Materials	Grade 304 Stainless Steel
Lockable	Yes
Colour	Satin
Servicing	Regular Maintenance
Warranty	2 Years*

Product Features

- Durable, heavy-duty product
- Complete range of washroom accessories
- Recommended for any Commercial project

Product Standards and Certifications

WaterMark
AS/NZS 3718 : 2005
Licence No. WMKA25617
SAI GLOBAL

Technical Drawings

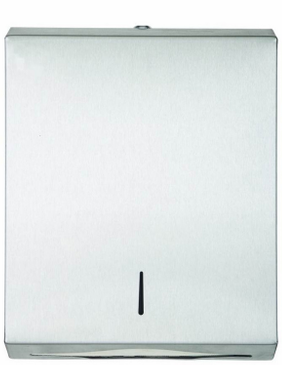

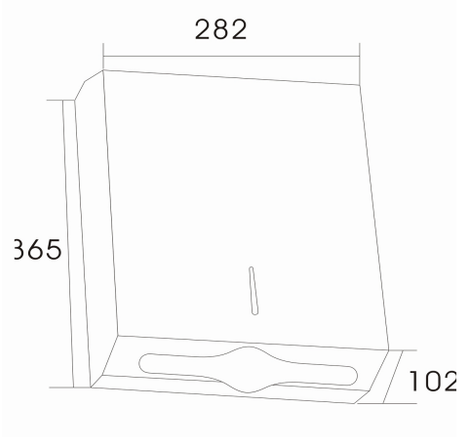

All measurements are in milimiters and are to be used as a giude only

JET7000

Soap Dispenser

JETSTREAM Plumbing

Description

Stainless Steel Hand Operated Soap Dispenser

Product Information

Technical Information:

Material	Grade 304 Stainless Steel
Lockable	Yes
Colour	Satin
Servicing	Regular Maintenance
Warranty	2 Years*
Soap Viscosity	Between 1-3500mPa.s (cP) *Suggested viscosity is 1800Pa.s (cP)*



Features:

- Durable, heavy-duty product
- Complete range of washroom accessories
- Recommended for any Commercial project

Technical Drawings

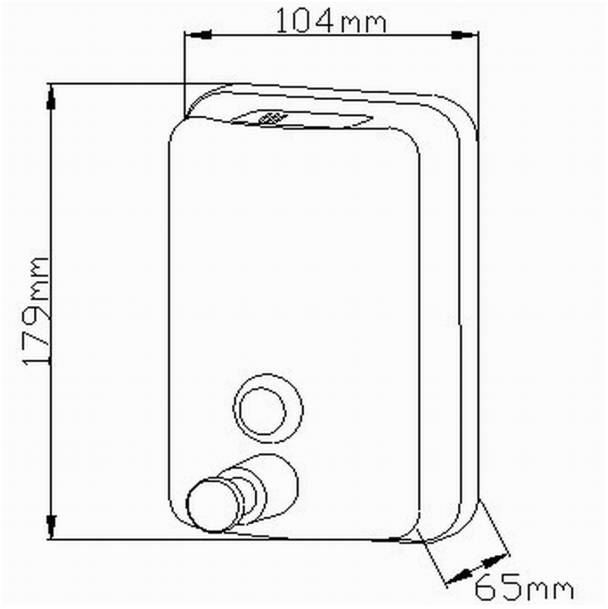

All measurements are in millimetres and are to be used as a guide only.
*Subject to terms and conditions