Technical data sheet for

ELECTRIC RANGE CONVECTION OVEN 900mm

RN8610EC, RN8613EC, RN8616EC, RN8619EC



RN8610EC

- Heavy-duty construction
- 2.4kW open radiant elements
- Optional Hot Plate elements
- 300mm, 600mm and 600mm griddle plate options
- Optional Hot Plate elements
- GN 2/1 6.6kW electric convection oven
- Drop down door
- Stainless steel exterior
- Easy clean
- Easy service
- Fully modular
- Low back models (RNL) available

Overall Construction

- Galvanized steel chassis
- Welded hob with 1.5mm 304 stainless steel bull nose
- Splashback and hob sides 1.2mm 304 stainless steel
- Front panels and oven sides 0.9mm 304 stainless steel
- 150mm legs in 63mm dia. heavy-duty 1.2mm 304 stainless steel with adjustable feet

Cooktop

- 2.4kW open radiant elements in heavy-duty welded element frames
- Vitreous enamelled element module and hob spill trays
- Hot Plate elements with machine finished 8mm steel plate (optional extra)
- 12mm thick mild steel griddle plates
- 2.5mm 304 stainless steel griddle splash guards
- Aluminised steel internal construction

Griddle sections are standard on RH side. Available on LH side or centre to order or by conversion.

Oven

- Fully welded and vitreous enamelled oven liner
- GN 2/1 capacity with 4 position racking
- Heavy-duty easy remove heavy wire chrome rack supports
- Cast iron even heat oven sole plate
- 6.5kW heating elements
- 100W heavy-duty motor
- 200mm diameter heavy-duty circulation fan
- Welded frame drop down door with heavy-duty spring hinge system
- 0.9mm 304 stainless steel door outer
- 1.0mm press formed vitreous enamelled door inner
- High density fibreglass insulated
- Stay cool stainless steel door handle with cast metal handle mounts
- Supplied with two chrome wire oven racks

Controls

- Large easy use control knob - heat resistant reinforced
- Easy view control settings on knob

Cooktop

- Radiant elements with energy regulator controls
- Hot Plate elements with energy regulator controls
- 50-320˚C thermostat per 300mm griddle section
- Indicator lights for power and heating for each element control

Oven

- 50-320˚C thermostatic control
- Indicator lights for power and heating

Cleaning and Servicing

- All models with easy clean stainless steel external finish
- Removable vitreous enamelled element module and hob spill trays
- Hinge up element and griddle sections
- Removable oven racking and sole plate
- Easy clean vitreous enamel oven and door inner
- Door hinge spring adjustable on unit (door outer removed)
- Door disengages for lift off removal and increased service access
- All parts front accessible from installed position
- Access to all parts from front of unit

Technical data sheet for

ELECTRIC RANGE CONVECTION OVEN 900mm

Specifications

Cooktop

2.4 kW Open Radiant elements
2.0 kW Hot Plate elements
3.6 kW Griddle elements
(per 300mm griddle section)

Oven

4.5kW bottom heat element
2.0kW top heat element

Oven Fan Motor

100W

Electrical requirements

RN8610EC	21.0 kW
RN8613EC	19.8 kW
RN8616EC	18.6 kW
RN8619EC	17.4 kW

Electrical connection

20.9 kW max.
400-415Vac, 50/60hz, 3P+N+E
L1 29.3A max.
L2 29.3A max.
L3 28.3A max.

Griddle Plate

300mm Griddle cooking surface
292mm x 475mm, 1387cm2
600mm Griddle cooking surface
592mm x 475mm, 2812cm2
900mm Griddle cooking surface
892mm x 475mm, 4237cm2

Oven Dimensions

Width 665mm
Depth 650mm
Height 400mm
Rack size 650mm x 600mm
Rack positions 4

Electrical connection

69mm from RH side, 484mm from rear,
and 150mm from floor

Dimensions

Width 900mm
Depth 805mm
Height 915mm
Incl. splashback 1130mm
Incl. low back 970mm

Nett weight

198kg

Packing data

1.03m3, 263kg
Width 945mm
Depth 870mm
Height 1255mm

Options at extra cost

Hot Plate elements
(replace individual open radiant elements)
Ribbed griddle plates
Joining caps
Castors
Plinth mounting

RN8610EC, RN8613EC, RN8616EC, RN8619EC

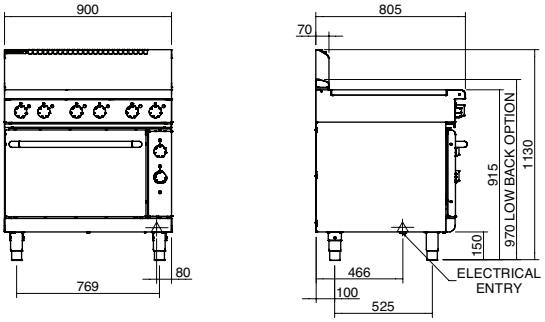

RN8610EC

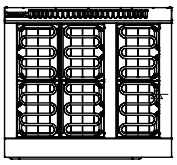

RN8613EC

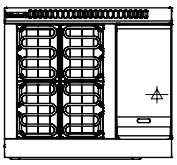

RN8616EC

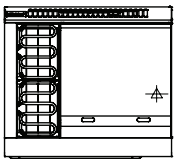

RN8619EC

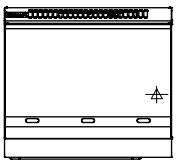

moffat.com.au
moffat.co.nz

Australia

Moffat Pty Limited

Victoria/Tasmania
740 Springvale Road
Mulgrave, Victoria 3170
Telephone +613-9518 3888
Facsimile +613-9518 3833
vsales@moffat.com.au

New South Wales
Telephone +612-8833 4111
nswsales@moffat.com.au

South Australia
Telephone +613-9518 3888
vsales@moffat.com.au

Queensland
Telephone +617-3630 8600
qldsales@moffat.com.au

Western Australia
Telephone +618-9413 2400
wasales@moffat.com.au

New Zealand

Moffat Limited

Rolleston
45 Illinois Drive
Izone Business Hub
Rolleston 7675
Telephone +64 3-983 6600
Facsimile +64 3-983 6660
sales@moffat.co.nz

Auckland
Telephone +64 9-574 3150
sales@moffat.co.nz

24:7 Service Support

ISO9001 Quality Management Standard

Designed and manufactured by

ISO9001
All Waldorf800 products are designed and manufactured by Moffat using the internationally recognised ISO9001 quality management system, covering design, manufacture and final inspection, ensuring consistent high quality at all times.

In line with policy to continually develop and improve its products, Moffat Limited reserves the right to change specifications and design without notice.

© Copyright Moffat Ltd

AN.W8.S.01.19