CHEFS DEPOT
Culinary Supplies

POLAR

Stainless Steel Counter Top Servery/Prep Refrigerators

Instruction manual



Model:

FA854-A/FA855-A/FA856-A/FA857-A/DA680-A/ AB090-A

Safety Tips

- Position on a flat, stable surface.
- A service agent/qualified technician should carry out installation and any repairs if required. Do not remove any components or service panels on this product.
- Consult Local and National Standards to comply with the following:
  - Health and Safety at Work Legislation
  - Fire Precautions
  - Wiring Regulations
  - Building Regulations
- DO NOT use jet/pressure washers to clean the appliance.
- DO NOT use the appliance outside.
- DO NOT use this appliance to store medical supplies.
- Always carry, store and handle the appliance in a vertical position and move by holding the base of the appliance.
- Always switch off and disconnect the power supply to the unit before cleaning.
- Keep all packaging away from children. Dispose of the packaging in accordance with the regulations of local authorities.
- If the power cord is damaged, it must be replaced by a POLAR agent or a recommended qualified technician in order to avoid a hazard.
- This appliance is not intended for use by persons (including children) with reduced physical, sensory or mental capabilities, or lack of experience or knowledge, unless they have been given supervision or instruction concerning the use of the appliance by a person responsible for their safety.
- Polar recommend that this appliance should be periodically tested (at least annually) by a Competent Person. Testing should include, but not be limited to: Visual Inspection, Polarity Test, Earth Continuity, Insulation Continuity and Functional Testing.

FA854-A to FA857-A_DA680-A_AB090-A_A5_v1_20210616.indb 2 2021/6/16 17:28

Caution Risk of Fire



- Do not store explosive substances such as aerosol cans with a flammable propellant in this appliance.

Warning: Keep all ventilation openings clear of obstruction. Unit should not be boxed in without adequate ventilation.

- **Warning:** Do not use mechanical devices or other means to accelerate the defrosting process, other than those recommended by the manufacturer.
- **Warning:** Do not damage the refrigerant circuit.
- **Warning:** Do not use electrical appliances inside the food storage compartments of the appliance, unless they are the type recommended by the manufacturer.

Introduction

Please take a few moments to carefully read through this manual. Correct maintenance and operation of this machine will provide the best possible performance from your POLAR product.

Pack Contents

The following is included:

- POLAR Refrigerator
- Instruction manual
- Gastranorm spacer bar
- Adjustable feet x 4
- Fixings (for AB090-A)

POLAR prides itself on quality and service, ensuring that at the time of packaging the contents are supplied fully functional and free of damage.
Should you find any damage as a result of transit, please contact your POLAR dealer immediately.

Installation

Note: If the unit has not been stored or moved in an upright position, let it stand upright for approximately 12 hours before operation. If in doubt allow to stand.

1. Remove the appliance from the packaging. Make sure that all protective plastic film and coatings are thoroughly removed from all surfaces.
2. To optimize performance and longevity, ensure a minimum clearance of 2.5cm is maintained between the unit and walls and other objects, with a minimum 5cm clearance on the top. **NEVER LOCATE NEXT TO A HEAT SOURCE.**

Note: Before using the appliance for the first time, clean the interior with soapy water.

- Level the appliance by adjusting the screw feet.

FA854-A to FA857-A_DA680-A_AB090-A_A5_v1_20210616.indb 3 2021/6/16 17:28

Fit Glass Panels (for AB090-A only)

1. Screw the collars to the rim of the appliance.

Note: Ensure the hole in the collar for the grub screw faces inwards.

2. Slot the two side panels into the collars, with the holes in the glass at the top.

Note: Ensure the screw hole furthest from the edge of the panel goes to the back of the appliance.

3. Screw a grub screw into each collar to secure the panels.

Note: Ensure the soft end of the grub screw is the end making contact with the glass. Do not over-tighten the grub screws as it will result in the glass breaking.

4. Slot the rear panel into the collars, with the holes in the glass at the top.
5. Screw a grub screw into each collar to secure the panel.
6. Slot the plastic plugs into each of the holes.
7. Screw the brackets to the inside of each pane using the bolt assemblies.

Note: Ensure the short end of the bolt assembly is on the outside of the panels.

8. Place the top panel onto the brackets, ensuring all holes line up.
9. Insert the plugs and attach the top panel to the brackets with the bolt assembly.

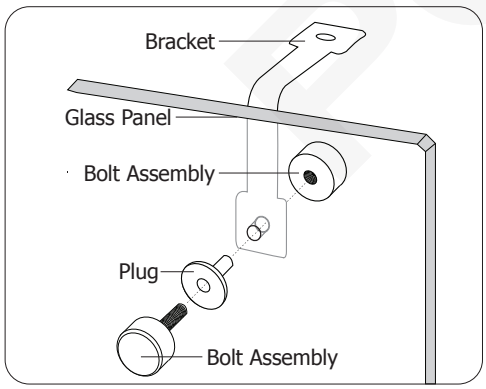

Operation

Storing Food

To get the best results from your POLAR appliance, follow these instructions:

- Only store foodstuffs in the appliance when it has reached the correct operating temperature.
- Ensure gastronorm bays are full at all times, even if the gastronorms are unused or empty. Empty bays will greatly reduce efficiency of the appliance.
- Use the spacer bars provided to fill any gaps (they are not required to support each GN pans).
- Do not obstruct the fans inside the appliance.
- Always cover the pan with lid when not in use.
- Do not place hot food or liquid inside the appliance.

Note: The appliance is not intended for the long term storage of food.

Turn On

1. Ensure the power switch is set to [**O**] and turn on at the socket.
2. Switch on the power switch [**I**]. The current temperature within the appliance is displayed.

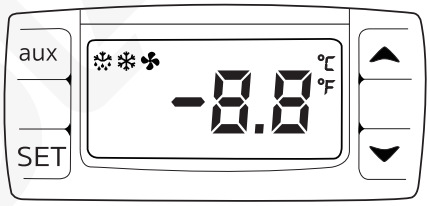

Set the Operating Temperature

1. Press the **SET** button for 3 seconds. The display will flash.
2. Press the ▲ or ▼ buttons to display the required temperature.
3. Press the **SET** button to store the temperature.

Manual Defrost

Press and hold the defrost button "**aux**" for 2 seconds to begin a manual defrost. The defrost light illuminates.

FA854-A to FA857-A_DA680-A_AB090-A_A5_v1_20210616.indb 4 2021/6/16 17:28

Cleaning, Care & Maintenance

- **Switch off and disconnect from the power supply before cleaning.**
- Clean the interior of the appliance as often as possible.
- Do not use abrasive cleaning agents. These can leave harmful residues.
- Clean the door seal with warm soapy water.
- Always wipe dry after cleaning.
- Do not allow water used in cleaning to run through the drain hole into the evaporation pan.
- Take care when cleaning the rear of the appliance. Sharp edges can cut.
- A POLAR agent or qualified technician must carry out repairs if required.

Cleaning the Condenser Filter

- The condenser is part of the refrigeration system. The condenser filter requires monthly cleaning.
- Always disconnect power supply before carrying out Routine Maintenance.
- Failure to clean the condenser filter will reduce the performance and life of your Polar unit and may invalidate your warranty.
- These models have a removable filter which can be cleaned with a vacuum cleaner.

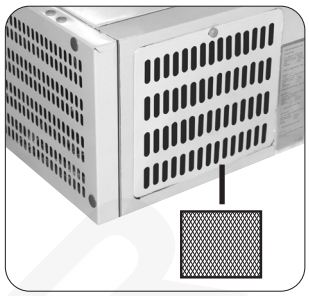

Troubleshooting

If your POLAR appliance develops a fault, please check the following table before making a call to the Helpline or your POLAR dealer.

Fault	Probable Cause	Solution
The appliance is not working	The unit is not switched on	Check the unit is plugged in correctly and switched on
	Plug or lead is damaged	Call POLAR agent or qualified Technician
	Power supply	Check power supply
The appliance turns on, but the temperature is too high/low	Too much ice on the evaporator	Defrost the appliance
	Condenser blocked with dust	Clean the Condenser
	Doors are not shut properly	Check doors are shut and seals are not damaged
	Appliance is located near a heat source or air flow to the condenser is being interrupted	Move the appliance to a more suitable location
	Ambient temperature is too high	Increase ventilation or move appliance to a cooler position
	Unsuitable foodstuffs are being stored in the appliance	Remove any excessive hot foodstuffs or blockages to the fan
	Appliance is overloaded	Reduce the amount of food stored in the appliance
The appliance is leaking water	The appliance is not properly levelled	Adjust the screw feet to level the appliance (if applicable)
	The discharge outlet is blocked	Clear the discharge outlet

FA854-A to FA857-A_DA680-A_AB090-A_A5_v1_20210616.indb 5 2021/6/16 17:28

Fault	Probable Cause	Solution
The appliance is leaking water	Movement of water to the drain is obstructed	Clear the floor of the appliance (if applicable)
	The water container is damaged	Call POLAR agent or qualified Technician
	The drip tray is overflowing	Empty the drip tray (if applicable)
The appliance is unusually loud	Loose nut/screw	Check and tighten all nuts and screws
	The appliance has not been installed in a level or stable position	Check installation position and change if necessary

Technical Specifications

Model	Voltage	Power	Current	Temperature Range	Capacity	Refrigerant	Dimensions H x W x D mm	Weight (kg)
FA854-A	230V 50Hz	110W	0.8A	2°C - 8°C	5 x gastronorm 1/4 Container	R600a 45g	330 x 1240 x 375	25
FA855-A	230V 50Hz	110W	0.8A	2°C - 8°C	7 x gastronorm 1/4 Container	R600a 45g	330 x 1540 x 375	29
FA856-A	230V 50Hz	122W	0.8A	2°C - 8°C	8 x gastronorm 1/4 Container	R600a 45g	330 x 1840 x 375	32
FA857-A	230V 50Hz	122W	0.8A	2°C - 8°C	10 x gastronorm 1/4 Container	R600a 45g	330 x 2040 x 375	34
DA680-A	230V 50Hz	110W	0.8A	2°C - 8°C	6 x gastronorm 1/4 Container	R600a 45g	330 x 1440 x 375	27
AB090-A	230V 50Hz	110W	0.8A	2°C - 8°C	6 x gastronorm 1/4 Container	R600a 45g	280 x 1440 x 375	27

Electrical Wiring

The plug is to be connected to a suitable mains socket.
POLAR appliances are wired as follows:

- Live wire (coloured brown) to terminal marked L
- Neutral wire (coloured blue) to terminal marked N
- Earth wire (coloured green/yellow) to terminal marked E



This appliance must be earthed.
If in doubt consult a qualified electrician.
Electrical isolation points must be kept clear of any obstructions. In the event of any emergency disconnection being required they must be readily accessible.

Compliance

The product must not be disposed of as household waste. To help prevent possible harm to human health and/or the environment, the product must be disposed of in an approved and environmentally safe recycling process. For further information on how to dispose of this product correctly, contact the product supplier, or the local authority responsible for waste disposal in your area.

POLAR parts have undergone strict product testing in order to comply with regulatory standards and specifications set by international, independent, and federal authorities.

POLAR products have been approved to carry the following symbol:



All rights reserved. No part of these instructions may be produced or transmitted in any form or by any means, electronic, mechanical, photocopying, recording or otherwise, without the prior written permission of POLAR.
Every effort is made to ensure all details are correct at the time of going to press, however, POLAR reserve the right to change specifications without notice.

FA854-A to FA857-A_DA680-A_AB090-A_A5_v1_20210616.indb 6 2021/6/16 17:28

DECLARATION OF CONFORMITY

• Conformiteitsverklaring • Déclaration de conformité • Konformitätserklärung • Dichiarazione di conformità • • Declaración de conformidad • Declaração de conformidade

Equipment Type • Uitrustingstype • Type d'équipement • Gerätetyp • Tipo di apparecchiatura • Tipo de equipo • Tipo de equipamento			**Model** • Modèle • Modell • Modello • Modelo • Malli		
G-Series Countertop Prep Fridge					
	(with stainless steel lids:)				
5 x ¼ GN	5 x ¼ GN	3 x 1/3 GN & 1 x ½ GN	G608 (& -E -A)	FA854 (& -E -A)	GD875 (& -E -A)
6 x ¼ GN	6 x ¼ GN	5 x 1/3 GN & 1 x ½ GN	AB090 (& -E -A)	DA680 (& -E -A)	GD876 (& -E -A)
7 x ¼ GN	7 x ¼ GN	8 x 1/3 GN	G609 (& -E -A)	FA855 (& -E -A)	GD877 (& -E -A)
8 x ¼ GN	8 x ¼ GN	9 x 1/3 GN	G610 (& -E -A)	FA856 (& -E -A)	GD878 (& -E -A)
10 x ¼ GN	10 x ¼ GN		G611 (& -E -A)	FA857 (& -E -A)	

Application of Territory Legislation & Council Directives(s) Toepassing van Europese Richtlijn(en) • Application de la/des directive(s) du Conseil • Anwendbare EU-Richtlinie(n) • Applicazione delle Direttive • Aplicación de la(s) directiva(s) del consejo • Aplicação de directiva(s) do Conselho	**Machinery Directive 2006/42/EC** EN 60335-1:2012 +A11:2014 +A13:2017 EN 60335-2-89:2010 +A1:2016 +A2:2017 EN 62233:2008 **Electro-Magnetic Compatibility (EMC) Directive 2014/30/EU - recast of 2004/108/EC** EN 55014-1:2017 EN 55014-2:2015 EN 61000-3-2: 2014 EN 61000-3-3: 2013 **Restriction of Hazardous Substances Directive (RoHS) 2015/863 amending Annex II to Directive 2011/65/EU**	**Electrical Safety** IEC 60335-1:2010 +A1:2013 +A2:2016 IEC 60335-2-89:2010 +A1:2012 +A2:2015 **Electromagnetic Compatibility** EN 55014-1:2017 EN 55014-2:2015 EN 61000-3-2: 2014 EN 61000-3-3: 2013
Producer Name • Naam fabrikant • Nom du producteur • Name des Herstellers • Nome del produttore • Nombre del fabricante • Nome do fabricante		**Polar**

I, the undersigned, hereby declare that the equipment specified above conforms to the above Territory Legislation, Directive(s) and Standard(s).
Ik, de ondergetekende, verklaar hierbij dat de hierboven gespecificeerde uitrusting goedgekeurd is volgens de bovenstaande Richtlijn(en) en Standaard(en).
Je soussigné, confirme la conformité de l'équipement cité dans la présente à la / aux Directive(s) et Norme(s) ci-dessus
Ich, der/die Unterzeichnende, erkläre hiermit, dass das oben angegebene Gerät der/den oben angeführten Richtlinie(n) und Norm(en) entspricht.
Il sottoscritto dichiara che l'apparecchiatura di sopra specificata è conforme alle Direttive e agli Standard sopra riportati.
El abajo firmante declara por la presente que el equipo arriba especificado está en conformidad con la(s) directiva(s) y estándar(es) arriba mencionadas.
Eu, o abaixo-assinado, declaro que o equipamento anteriormente especificado está em conformidade com a(s) anterior(es) Directiva(s) e Norma(s)

Date • Data • Date • Datum • Data • Fecha • Data	**10th June 2021**		
Signature • Handtekening • Signature • Unterschrift Firma • Firma • Assinatura	DocuSigned by: Ashley Hooper B39382C9FD9C478...	DocuSigned by: Eoghan Donnellan D352874F7FAB460...	DocuSigned by: Josie Holt 3582E210C4054DA...
Full Name • Volledige naam • Nom et prénom • Vollständiger Name • Nome completo • Nombre completo • Nome por extenso	**Ashley Hooper**	**Eoghan Donnellan**	**Josie Holt**
Position • Functie • Fonction • Position • Qualifica • Posición • Função	**Technical & Quality Manager**	**Commercial Manager/ Importer**	**Commercial Manager/ Responsible Supplier**
Producer Address • Adres fabrikant • Adresse du producteur • Anschrift des Herstellers • Indirizzo del produttore • Dirección del fabricante • Morada do fabricante	**Fourth Way, Avonmouth, Bristol, BS11 8TB United Kingdom**	**42 North Point Business Park New Mallow Road Cork Ireland**	**15 Bagdally Road, Campbelltown NSW 2560**





http://www.polar-refrigerator.com/

FA854-A to FA857-A_DA680-A_AB090-A_A5_v1_20210616