CONVOTHERM®

CHEFS DEPOT Culinary Supplies

CONVOTHERM maxx pro

Convotherm maxx pro easyTouch Combi Steamer

CXEBT10.20D ELECTRIC BOILER 22 x 1/1 GN or 11 x 2/1 GN

- Boiler system
- Natural Smart Climate™ (ACS+) cooking methods: Steam, Combi-steam, Convection
- Natural Smart Climate™ extra functions:
  – Crisp&Tasty - 5 moisture removal settings
  – BakePro - 5 levels of traditional baking
  – HumidityPro - 5 humidity settings
  – Controllable fan - 5 speed settings
- easyTouch 10" TFT HiRes glass touch display (capacitive)
- ConvoClean+ fully automatic cleaning system with eco, regular and express modes, including optional single-dose dispensing
- HygieniCare
- WiFi and Ethernet interface (LAN)
- USB port integrated in the control panel
- Steam generated by high-performance boiler outside the cooking chamber
- LED lighting in oven cavity
- Triple glass appliance door
- Right-hinged appliance door
- Disappearing door



Standard Features

- Cooking methods:
  – Steam (30-130°C) with guaranteed steam saturation
  – Combi-steam (30-250 °C) with automatic moisture control
  – Convection (30-250 °C) with optimised heat transfer
- Operation of easyTouch user interface:
  – 10" TFT HiRes glass touch display (capacitive)
  – Smooth-action, quick reacting scrolling function
- Climate Management
  – Natural Smart Climate™ (ACS+), HumidityPro, Crisp&Tasty
- Quality Management
  – Airflow Management, BakePro, Multi-point core temperature probe
  – Preheat and cool down function
- Production Management
  – Automatic cooking with Press&Go with up to 399 cooking profiles
  – Integrated cookbook with 7 different categories
  – TrayTimer – load management for different products at the same time (manual mode)
  – TrayView – load management for automatic cooking of different products using Press&Go
  – Favourites management
  – HACCP data storage
  – USB port
  – ecoCooking – energy-save function
  – LT cooking (low temperature cooking) / Delta-T cooking
  – Cook&Hold – cook and hold in one process
  – Autostart
  – Regenerate+ - flexible multi-mode rethermalisation function with preselect
- Cleaning Management:
  – ConvoClean+ - fully automatic cleaning system
  – Quick access to individually created and saved cleaning profiles
  – Cleaning scheduler
  – FilterCare interface
- HygieniCare: safety by antibacterial surfaces
  – Hygenic Steam Function
  – Hygienic Handles
  – SteamDisinfect
- Door handle with safety latch and sure-shut function
- Adjustable appliance feet, from 100 mm to 125 mm
- Integrated recoil hand shower

Options

- ConvoSmoke – built in food-smoking function (HotSmoke)
- Steam and vapour removal (built-in condensation hood)
- Sous-vide sensor, with external socket
- Core temperature sensor, with external socket
- Marine model
- Available in various voltages

Accessories

- Stainless steel stand
- Stacking kit
- ConvoLink – HACCP and cooking profile management PC software
- ConvoVent 4 condensation hood with grease filter
- ConvoVent 4+ condensation hood with grease and odour filter
- Banquet system package: plate rack, mobile shelf rack, transport trolley, thermal cover (induvial items are available)
- Care products for ConvoClean+ fully automatic cleaning system (multiple and single-dose dispensing)

MOFFAT®

CONVOTHERM

CONVOTHERM maxx pro

Convotherm maxx pro easyTouch Combi Steamer

CXEBT10.20D ELECTRIC BOILER 22 x 1/1 GN or 11 x 2/1 GN

Front view

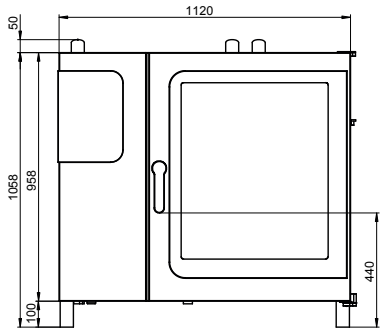

View from above with wall clearances

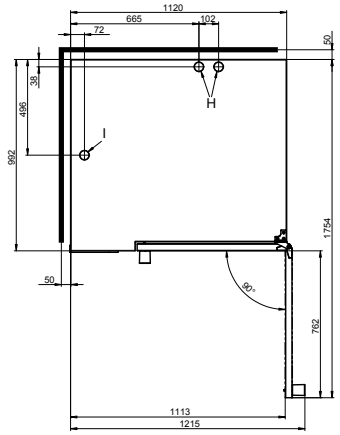

Connection points

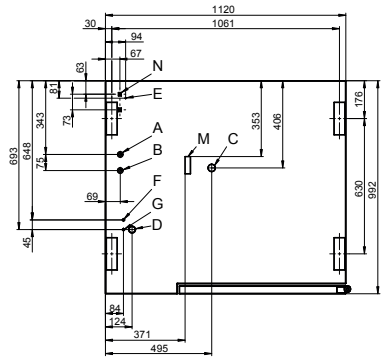

A	Water connection (for boiler)
B	Water connection (for cleaning, recoil hand shower)
C	Drain connection DN 50
D	Electrical connection
E	Equipotential bonding
F	Rinse-aid connection
G	Cleaning-agent connection
H	Air vent Ø 50 mm
I	Dry air intake Ø 50 mm
M	Safety overflow 80 x 25 mm
N	RJ45 Ethernet port

DIMENSIONS

Width	1211 mm
Depth	992 mm
Height	1058 mm
Weight	210kg

PACKED DIMENSIONS

Width	1345 mm
Depth	1140 mm
Height	1300 mm
Weight (including cleaning system)	248 kg

Safety clearances*

Rear	50 mm
Right	50 mm
Left (larger recommended for servicing)	50 mm
Top (for ventilation)	500 mm

*Heat sources must lie at a minimum distance of 500 mm from the appliance.

INSTALLATION REQUIREMENTS

For precise installation instructions please refer to the units installation manual

LOADING CAPACITY

Max. number of food containers

Shelf distance	68mm
GN 1/1 (with standard rack)	22
GN 2/1 (with standard rack)	11
600 x 400 baking sheet (with appropriate rack)	16

Max. loading weight GN 1/1 / 600 x 400

Per combi steamer	100 kg
Per shelf	15 kg

ELECTRICAL SUPPLY

3N~ 400V 50/60Hz (3P+N+E)

Rated power consumption	33.7 kW
Rated current	48.7 A
Fuse	50 A
RCD (GFCI), frequency converter	Type A
(singlephase)	(recommended), type B/F (optional)

Special voltage options available on request.
Connection to an energy optimisation system as standard.

WATER CONNECTION

Water supply

2 x G 3/4" permanent connection, optionally including connecting pipe (min. DN13 / 1/2")

Flow pressure	150 - 600 kPa (1.5 - 6 bar)

Appliance drain

Drain version	Permanent connection (recommended) or funnel waste trap
Type	DN50 (min. internal Ø: 46 mm)
Slope for waste-water pipe	min. 3.5% (2°)

WATER QUALITY

Drinking water

Total hardness

Cleaning, recoil shower	4-20 °dh / 70 – 360 ppm /
Shower, boiler	7 – 35°TH / 5 – 25°e

Properties

pH	6.5 - 8.5
Cl- (chloride)	max. 60 mg/l
Cl_2 (free chlorine)	max. 0.2 mg/l
SO_4^{2-} (sulphate)	max. 150 mg/l
Fe (iron)	max. 0.1 mg/l
Temperature	max. 40°C
Electrical conductivity	min. 20 µS/cm

EMISSIONS

Heat output

Latent heat	4700 kJ/h / 1.31 kW
Sensible heat	5100 kJ/h / 1.42 kW
Waste water temperature	max. 80 °C
Noise during operation	max. 70 dBA

STACKING KIT

Permitted combinations	6.20 on 10.20
(Electric on electric appliance)	

MOFFAT

moffat.com.au
moffat.co.nz

Australia
moffat.com.au

Moffat Pty Limited

Victoria/Tasmania
740 Springvale Road
Mulgrave, Victoria 3170
Telephone +61 3-9518 3888
Facsimile +61 3-9518 3833
vsales@moffat.com.au

New South Wales
Telephone +61 2-8833 4111
nswsales@moffat.com.au

South Australia
Telephone +61 3-9518 3888
vsales@moffat.com.au

Queensland /
Northern Territory
Telephone +61 7-3630 8600
qldsales@moffat.com.au

Western Australia
Telephone +61 8-9413 2400
wasales@moffat.com.au

New Zealand
moffat.co.nz

Moffat Limited

Rolleston
45 Illinois Drive
Izone Business Hub
Rolleston 7675
Telephone +64 3-983 6600
Facsimile +64 3-983 6660
sales@moffat.co.nz

Auckland
Telephone +64 9-574 3150
sales@moffat.co.nz

In line with policy to continually develop and improve its products, Moffat Limited reserves the right to change specifications and design without notice.

© Copyright Moffat Ltd
AN.CON.S.01.23

24:7 Service Support