CHEFS DEPOT
Culinary Supplies

PHOENIKS

MIXING KETTLE 400L WITH STEAM CONNECTION
REF. W237042

Product Advantages:

- Steam from plant network (pressure 3 to 6 bar max).
- Water inlet.
- Electric tilting.
- Watermeter on hot or cold water network Mixing arm inclined at 15°C with engine power fixed on top. Equiped with teflon scrappers fixed on a s/s axis
- Control panel: Siemens with colour 7 inches touch screen. Setting of 100 recipes Possibility to transfer the production data on a USB key.

Options:

- Cooling device: Cooled water inlet in the exchanger, evacuation of overflow of water, pipe at the top of the tank to be connected to the compressed air network in order to reduce the pulling time, clean up of the exchanger at the end of the cycle.
- Drain rack: Perforation diameter 8 mm

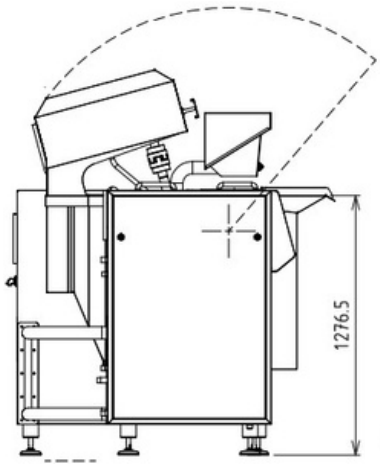

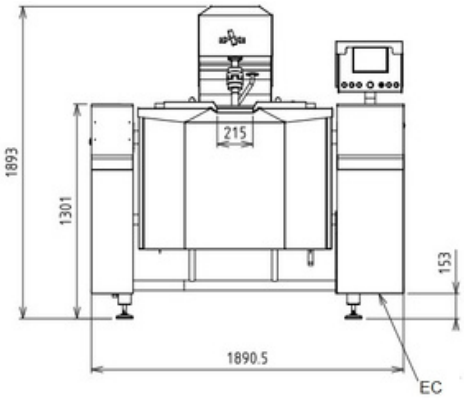

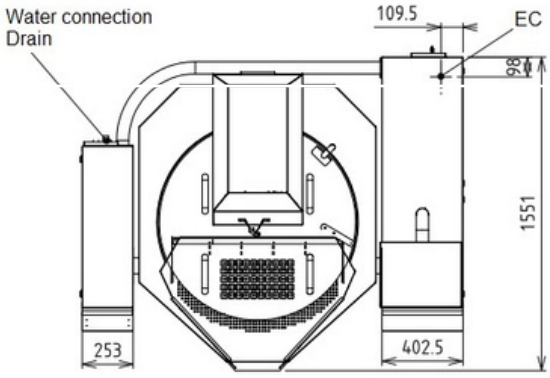



Technical Data:

External dimensions (WxHxD)	1890 x 1900 x 1550 mm
Water network pressure	2/3 bar (max)
Steam network pressure	3-6 bar (max)
Maximum pressure	0.5 bar
Maximum steam temperature	105 °C
Kettle flow	200 kg/hr
Capacity	400 L
Connected load (kW)	4
Voltage (V)	415 3 phase AC
Frequency (Hz)	50
Recommended fuses (A)	3 x 10
Space between tank and pillars	70 mm (easy cleaning)

CAPIC
Depuis 1955

phoeniks.com.au
P- 1300 405 404
E- contact@phoeniks.com.au