PHOENIKS

CHEFS DEPOT
Culinary Supplies

Mixing Kettle 225L
MODEL NO: W296208

Pilot kettle BM 225L elec mixing arm and elliptic bottom.

Product Advantages:

- Tank and double layer in stainless steel 18.10 welded on the top
- Immersed heater into the double skin Electronic regulation of the water level into the double skin
- Hot/Cold water supply.
- Volumetric watermeter.
- Heating stop while tilting.
- Differred start + timer
- Food trap
- 9 speed rotations programmed
- Tilting by electric cylinders (IP66 without maintenance)
- Removable mixing arm with bottom and sides PTFE scrapers
- Tilting control for a real ease of use, hygiene and safety
- Tilting stop in any position of tank

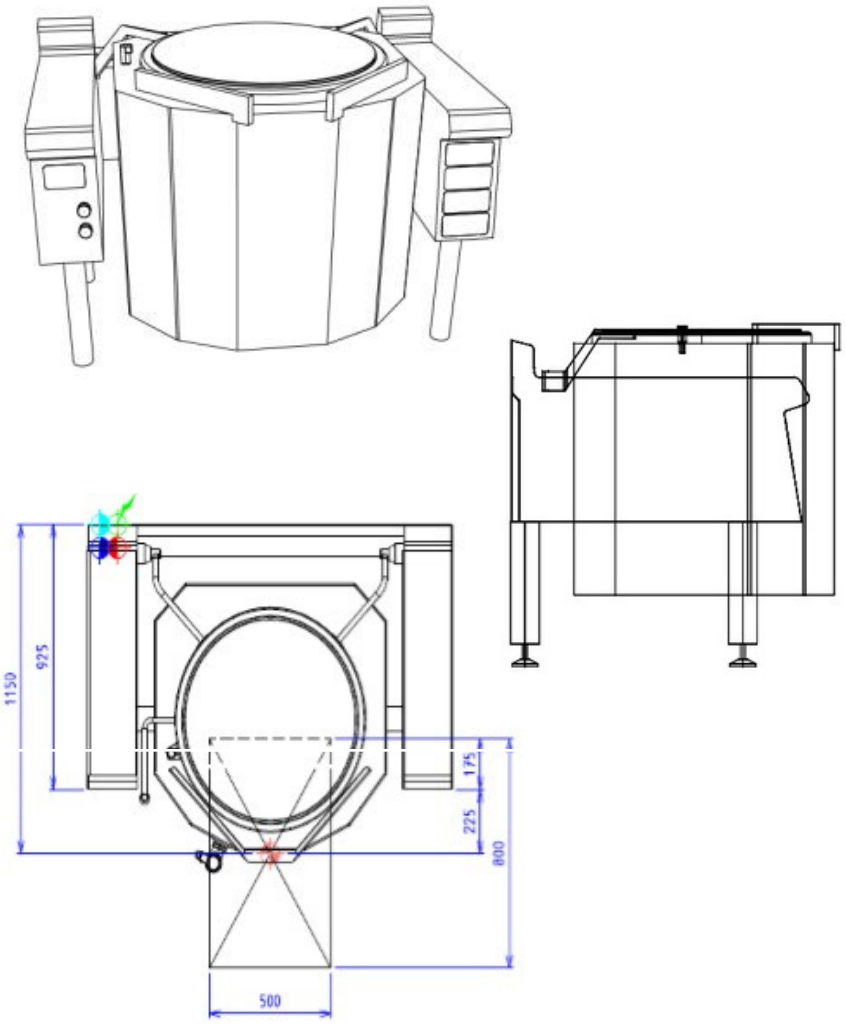

Options:

- 450 stainless steel feet height 900/930
- Side edge straight open for assembly machine on the right side
- Side edge straight open for assembly machine on the left side draining valve 40/49



CAPIC
France 1955 ★★★★

Technical Data:

External dimensions	1500 X 925 X 900
Top thickness	3 mm
Structure	2 mm in stainless steel
Ring thickness	2 mm
Elliptical bottom	3 mm
Tank dimensions (ØxP)	750x570
Capacity	225L
Connected load (kW)	22.5
Voltage (V)	415 3 phase AC
Recommended fuses (A)	3 x 32
Space between tank and pillars	70 mm (easy cleaning)

phoeniks.com.au
P- 1300 405 404
E- contact@phoeniks.com.au