PHOENIKS

FLEXI COMBI MAGIC PILOT MAXI 6.2 GAS
MODEL NO: FKG062R_MP

MKN combi steamer FlexiCombi 12 tray GN 1/1 or FlexiRack® (530 x 570 mm) with manual operation system.

Product Advantages:

- FlexiRack® – 50% more cooking capacity (= save time and energy).
- ClimaSelect – Humidity and temperature control measurement (= reliable food quality).
- 5 programmable fan speeds for best cooking uniformity.
- Up to 100 individual cooking programmes can be stored in up to 6 steps.
- 316 S11 durable hygienic cooking chamber.
- EasyLoad crosswise insertion.
- Handshower.
- DynaSteam2 – It speeds up the cooking process and saves energy.
- Integrated heat exchanger.
- WaveClean – Automatic cleaning system (safe, easy, economical).
- USB interface.
- 3 years warranty parts and labour.

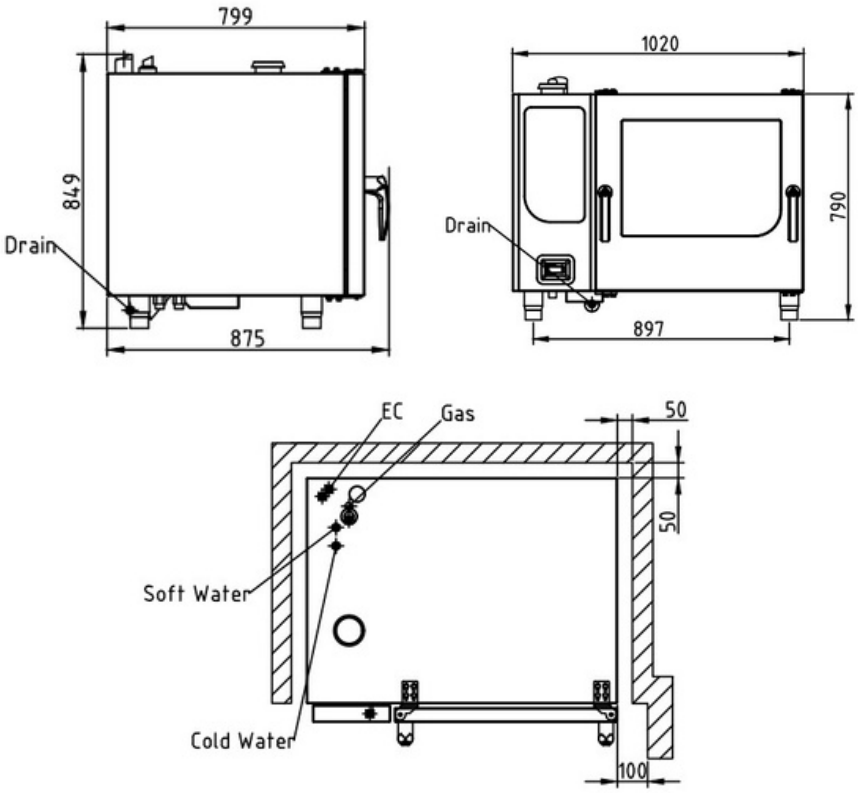

Installation requirements:

- Soft Water / Water supply / Connection to waste water provided by customer.
- If mineral content is high, reverse osmosis system may be advisable.

Capacity: Meals per day	60 - 160



Technical Data:

Width x Height x Depth (mm)	1020 x 790 x 799
Connected load (gas) (MJ/h)	61.2
Connected load (electrical) (kW):	0.6
Voltage (V) / EC:	240 1 phase AC
Recommended fuses (A):	10
Frequency range (Hz):	50
Soft Water connection:	DN 20 (R ¾“ inside)
Water connection:	DN 20 (R ¾“ inside)
Waterpressure (kPa):	200 - 600 (2 - 6 bar)
Drain connection:	DN 50
FlexiRack® (530 x 570 mm)	6
Gastronorm 1/1 (530 x 325 mm):	12 (max. 65 mm deep)
Gastronorm 2/1 (530 x 650 mm):	6 (max. 65 mm deep)
Material housing:	1.4301
Material cooking chamber:	1.4404
Gross weight (kg):	160
Heat emission latent (W):	3060
Heat emission sensitive (W):	2550
Type of protection:	IPX 5

CHEFS DEPOT
Culinary Supplies

phoeniks.com.au
P- 1300 405 404
E- contact@phoeniks.com.au