CHEFS DEPOT
Culinary Supplies

MIMAC
food processing equipment

BABYDROP

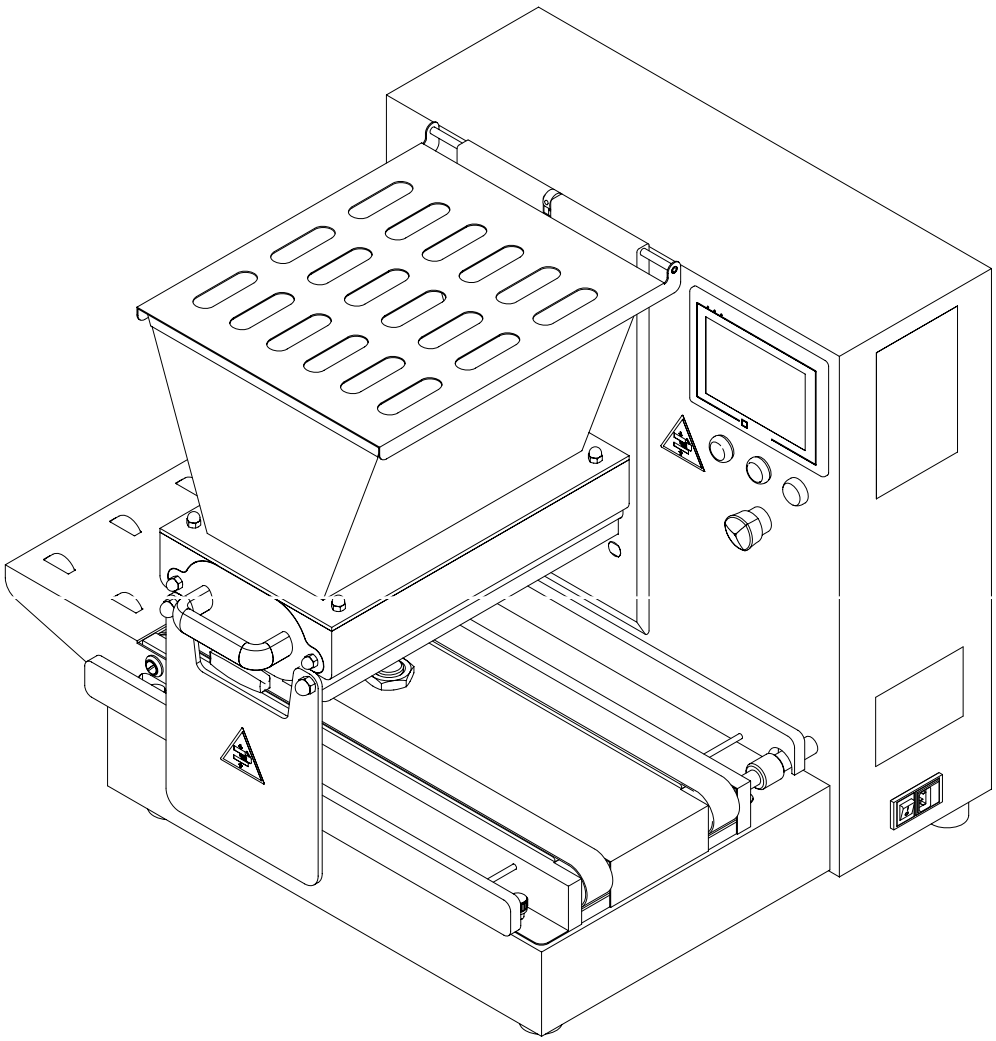

USE AND MAINTENANCE MANUAL

S/N: _____
Manual: 91566-2001-1
Date: _____

ENGLISH

1 INTRODUCTION 5
1.1 OWNERSHIP OF THE MANUAL 5
1.2 PURPOSE OF THE MANUAL 5
1.3 VALIDITY OF THE MANUAL 5
1.4 SYMBOLISM 5
1.5 ATTACHED DOCUMENTS 5
1.6 IMPORTANCE OF THE MANUAL 5
1.7 INTENDED AUDIENCE 5
1.8 PRESERVATION OF THE MANUAL 6
2 PRELIMINARY INFORMATION 7
2.1 MANUFACTURER DETAILS 7
2.2 CUSTOMER SERVICE 7
2.3 CE DECLARATION OF CONFORMITY 7
2.4 NORMATIVE REFERENCES 7
2.5 GARANTEE 7
2.6 OWNERSHIP OF SOFTWARE 8
2.7 PREPARATION OF THE WORK PLACES 8
2.8 RECEIVING OF THE MACHINE 8
2.8.1 PACKAGING 8
2.8.2 LIFTING AND HANDLING 8
2.8.3 UNPACKING 9
2.9 USERS TRAINING 9
2.10 TERMS OF USE 9
2.11 INTENDED USE 10
2.12 NOISE WARNINGS 10
2.13 CLOTHING 10
3 SAFETY 11
3.1 GENERAL INFORMATION 11
3.2 DESCRIPTION OF PICTOGRAMS 11
3.3 DESCRIPTION OF SAFETY DEVICES 11
3.3.1 FIXED GUARDS 11
3.3.2 MOVABLE GUARDS 11
3.4 DISPOSAL OF SECURITY DEVICES AND SIGNALS 12
3.5 RESIDUAL RISKS 12
4 MACHINE DESCRIPTION 13

4.1 GENERAL DESCRIPTION 13
4.2 IDENTIFICATION 13
4.3 TECHNICAL SPECIFICATIONS 13
4.4 MAIN COMPONENTS 14
4.5 EQUIPMENT 15
4.6 WORKING AREAS 15
4.7 PRODUCTS OVERVIEW 16

5 STARTUP AND FUNCTION CHECK 17
5.1 POSITIONING 17
5.2 POWER CONNECTION AND EARTHING 17
5.3 CONTROLS DESCRIPTION 17
5.3.1 CONTROL PANEL 17
5.3.2 TOUCHSCREEN PANEL 18
5.3.3 MASTER SWITCH 18
5.4 GETTING STARTED 19
5.4.1 PUT ON THE DOSING UNIT AND THE MOULD 19
5.5 SAFETY DEVICES CHECKING 20
5.6 EXAMPLES 21
5.6.1 FIXED PRODUCT 21
5.6.2 LONG PRODUCT 22
5.7 HOW TO START THE PRODUCTION 23
5.7.1 HOW TO LOAD THE BATTER INTO THE HOPPER 23
5.7.2 HOW TO PUT THE BATTER UNDER PRESSURE 23
5.8 MACHINE EMERGENCY STOP 24
5.9 PASSWORDS MANAGEMENT 25
5.9.1 MACHINE PASSWORD 25
5.9.2 HOW TO ENABLE AND DISABLE THE USER PASSWORD 25
5.9.3 HOW TO MODIFY THE USER PASSWORD 26
5.10 TECHNICAL AND DIAGNOSTIC MENU 27
5.10.1 MACHINE DATA MENU 27
5.10.2 TECHNICAL VIDEO 28
5.11 ALARMS 30

6 CLEANING 32
6.1 GENERAL INFORMATION 32
6.1.1 FOOD HYGIENE REQUIREMENTS 32
6.1.2 CLEANING OF PARTS WHICH DO NOT COME INTO CONTACT WITH FOOD 32
6.1.3 CLEANING OF PARTS WHICH COME INTO CONTACT WITH FOOD 32
6.2 ROLLERS TYPE DOSING UNIT DISASSEMBLING AND CLEANING 33
6.3 GEARS PUMP TYPE DOSING UNIT DISASSEMBLING AND CLEANING . . . 34
6.4 STATIONARY MOULD DISASSEMBLING AND CLEANING 35

7 MAINTENANCE 36
7.1 GENERAL INFORMATION 36
7.2 WEARABLE PARTS 36
7.3 ROUTINE MAINTENANCE 36
7.4 SPECIAL MAINTENANCE 36
7.5 MAINTENANCE OF ELECTRICAL AND ELECTRONIC DEVICES 36
7.6 SPARE PARTS REQUESTING 36
7.7 STORAGE 37
7.8 DISMANTLING AND SCRAPPING 37

1 INTRODUCTION

1.1 OWNERSHIP OF THE MANUAL

This manual belongs exclusively to MIMAC ITALIA SRL.
Reproduction, even partial, is forbidden unless authorisation has been received from the Manufacturer.

1.2 PURPOSE OF THE MANUAL

The aim of this manual is to provide the necessary information for correct use of the machine in safety to carry out continuous operations as contemplated in the design phase.

1.3 VALIDITY OF THE MANUAL

This manual reflects the machine state of the art at the moment in which it is placed on the market.
The Manufacturer reserves a right to make modifications to the machine if needed without notice.
Any integration sent by the Manufacturer to users must be kept together with the manual and becomes an integral part of it.

1.4 SYMBOLISM



Useful information



Important communications for the user regarding safety and caution when carrying out operations



Presence of risks and danger to the health and safety of exposed people



The use of personal protection equipment is obligatory



Communications regarding machine scrapping and packaging elimination

1.5 ATTACHED DOCUMENTS

- CE declaration of conformity
- Wiring diagrams
- Maintenance recordings
- Spare parts tables
- Spare parts request form

1.6 IMPORTANCE OF THE MANUAL

This manual must be read before starting any operation. Good machine operation is guaranteed if all the instructions contained in this manual are applied correctly.
The machine must not be used and no intervention must be carried out on it if this manual has not been read carefully and understood in all its parts.
It is also forbidden to use the machine for purposes other than those indicated, or to neglect operations that are necessary for safety.

1.7 INTENDED AUDIENCE

- Operator in charge of safety and accident prevention
- Operators in charge of transporting the machine
- Operators in charge of connections
- Operators in charge of testing the machine
- Operators in charge of the operators' training

- Machine operators
- Operators in charge of maintenance
- Operators in charge of machine scrapping

1.8 PRESERVATION OF THE MANUAL

The manual must be kept in good condition and in a suitable place that is known to all machine users for consultation.
If the manual is lost, deteriorated or if additional copies are necessary, please contact the Manufacturer directly.
The manual must be kept until the machine is scrapped.
If the machine is sold, the manual must be delivered to the new owner together with the CE declaration of conformity and all others attachments.

2 PRELIMINARY INFORMATION

2.1 MANUFACTURER DETAILS

MIMAC ITALIA S.R.L.

Via dell'Industria, 22
36013 Piovene Rocchette (VI)
ITALY

Tel.: +39 0445 576250
Fax: +39 0445 576112
E-mail: info@mimac.com

2.2 CUSTOMER SERVICE

Machine assistance is supplied by the Manufacturer or the authorised Retailer.
Please contact the Manufacturer or the authorised Retailer for any request and refer to the indications printed on the information plate of the machine.

2.3 CE DECLARATION OF CONFORMITY

The machine indicated in the manual is manufactured in compliance with the relevant Community Directives that were in force at the moment in which the machine was placed on the market. As the machine is not included in Annex IV of the 2006/42/EC Machinery Directive, the Manufacturer has supplied self-certification for placing “CE” marking according to the reference directives.

2.4 NORMATIVE REFERENCES

- Machinery Directive 2006/42/EC
- Low Voltage Directive 2006/95/EC
- Electromagnetic Compatibility Directive 2004/108/E
- UNI EN ISO 12100:2010 - Safety of machinery - General principles for design - Risk assessment and risk reduction.
- UNI EN ISO 13850:2008 - Safety of machinery - Emergency stop - Principles of design.
- UNI EN 1088:2008 - Safety of machinery - Interlocking devices associated with guards - Principles for design and selection.
- CEI EN 60204-1 - Safety of machinery. “Electrical equipment of machines”.
- Regulation (CE) N. 1935/2004 of 27 October 2004

2.5 GARANTEE

The machine is guaranteed for 12 months. The guarantee only covers those parts that present production faults and excludes the electric system and the motors. The indicated period is valid for a machine that works eight hours a day and must be halved for heavier-duty conditions.
During the guarantee period the Manufacturer shall supply, free of charge, within the minimum technical periods, and ex factory, the parts or items that have evident manufacturing faults, and only under the condition that the machine was used following the regulations established by the Manufacturer (installation, use, maintenance and performance limits).
Items not manufactured by MIMAC ITALIA SRL are excluded from the guarantee, for example motors and electrical apparatus, cylinders and pneumatic components, as well as all material not directly guaranteed by its own manufacturer. In addition, all parts damaged during the transport, or because of bad and/or incorrect installation or maintenance, or because of neglect or incorrect use, are not covered by the guarantee.
If the faulty parts are repaired or replaced in the premises of the customer, he will be charged with the cost of travelling, board and lodging and of the working hours of the technicians sent to repair or replace the parts. The hourly cost shall be quantified according to the Anima (Federation of the Italian Association of Mechanical and Engineering Industries) tables in force at the moment of the intervention.
If in the unquestionable opinion of our technicians it is not possible to intervene in the customer’s premises, the customer shall send the machine ex factory to MIMAC ITALIA SRL which, after repairing the faulty part at no charge, shall return the machine carriage forward.
When the previously indicated guarantee period has expired, the customer will be also charged with both the cost of the replaced parts and the cost of the worked time.
The guarantee is valid only for the original purchaser, and does not consider machine replacement.

The guarantee is rendered null and void when the machine has been tampered with, or modified and/or repaired by people who have not been expressly authorised by MIMAC ITALIA SRL.

2.6 OWNERSHIP OF SOFTWARE

The implemented software, which runs machine operations, belongs to MIMAC ITALIA SRL registered in Via dell'Industria, 22 - Piovene Rocchette (VI) - ITALY.
The Customer is licensed to use the software in compliance with the instructions in this manual.
The software cannot be altered, modified, copied and/or reproduced without written authorisation from MIMAC ITALIA SRL.
Being the owner of the software used to run its machines, MIMAC ITALIA SRL will not grant the sources codes of its software for any reason and will persecute anyone or anything that copies, reproduces, decodes or modifies same software.

2.7 PREPARATION OF THE WORK PLACES

Unless otherwise indicated in the contract, the following must be carried out by the Customer:

- preparation of the areas, including any brickwork and/or piping and conduit that are required;
- the electric power supply for the machine, in compliance with laws in force in the user country.

The installation area of the machine, which is supposed to be destined to the production of oven-baked products, must have:

- openings that allow the bulkiest parts of the machine to pass;
- construction characteristics that are in compliance with current standards;
- an electric system that is in compliance with current standards; special care must be taken with the earthing system and the main panel, which must have relative protection devices against overload currents and short circuits. The nominal power installed on the machine is indicated in the identification plate.

The complete electric system must be realised and kept periodically under control by professionally trained technicians who can accompany each intervention with a declaration of conformity to “the rules of the trade”.

2.8 RECEIVING OF THE MACHINE



The Manufacturer is not liable for any accident, damage or machine fault that may occur if the indications that follow are not observed.

Make sure no damage occurred during transport and that the packaging is whole. If this is not the case, inform the shipping agent and write “Accepted with reservations” on the shipping document.
If any damage is caused during transport, the shipping company must be informed in by the Customer, writing within 8 days from receipt of the goods. Inform the Manufacturer immediately if serious damage has occurred.
Make sure the goods correspond to the items listed in the shipping document. Inform the Manufacturer immediately if pieces are missing.

2.8.1 PACKAGING

The machine and its accessories can be delivered:

- without packaging, fixed to the loading surface only protected by an outer shield to prevent scratches;
- by container or in palletised wooden crates.

If transported by sea, the machine is inserted inside a sealed wrapping to protect it from atmospheric agents.

2.8.2 LIFTING AND HANDLING



All operations must be carried out by people who have been authorised and under the supervision of a person in charge.



Operators must wear all the personal protection equipment necessary for the operations to be carried out and must use suitable tools.

Before starting operations, identify and make sure there are no danger points in the movement area, including the area where the means of transport is positioned and the installation area.
The transport and lifting means must be suitable for the weight to be lifted. Concerning this, read the weights printed on the packaging and/or indicated in this manual.
Inspect the cables before using them to make sure there is no damage or signs of wear. Do not twist or knot the cables and follow the manufacturer's instructions; these instructions are valid also for chains or belts.
Be careful when positioning the lifting or slinging systems; make sure the load is perfectly balanced before lifting it.
It is forbidden to get onto the load, or to move and/or remain under it while it is being moved.
It is forbidden for those people who are not involved in transporting and moving to access the relative areas.
All operators must remain at the safety distance from the packages when they have been lifted from the ground to avoid being hit if they fall.
Do not allow the load to oscillate during lifting.
Lift the machine using a lift truck, inserting the forks under the lower surface at the baricentre point
Position the machine on an integral floor or on a solid and proper bolster

2.8.3 UNPACKING

When installation has been completed, all the packing material must be disposed of in compliance with national regulations in force.
The equipment and material used for lifting should be positioned in a suitable place and stored carefully for possible machine transfer.

2.9 USERS TRAINING

The machine was designed and manufactured for professional use. Those who use the machine must be trained in order to become familiar with:

- all the functions of the control panel;
- all the installed protection and safety systems;
- commissioning and putting out of service;
- the possible work cycles;
- the various machine stop devices, including the emergency stops;
- loading the material to be worked;
- unloading the worked material;
- the contents of this Manual;
- the checks to be carried out periodically;
- all the routine maintenance operations.

Operators must also be trained in not to do anything on their own initiative, because they do mustn't make interventions that are within their competence and technical knowledge
If something wrong occurs the operators have to:

1. intervene immediately and stop the machine, using an emergency push-button;
2. immediately inform their superior, and request his timely presence.

When the training phase has been completed, operators must be tested on their acquired level of awareness. The training phase and the result of the attitude test must be documented within the company.

The machine must not be used by people who have not been declared legally suitable for handling food products.

2.10 TERMS OF USE

Permitted environmental values for good machine operation:

- temperature from +5 to +40 °C with an average of not more than 35 °C over 24 hours;
- relative humidity between 30% and 95% (without condensation);
- absence of ionising and non-ionising radiation.

The environment around the machine must be kept clean. Remove the plug from the mains before moving the machine for cleaning.
The illumination in the workplace must:

- guarantee good visibility at every point;
- not create dangerous reflections;
- allow the control panel and the emergency push-buttons to be read clearly.

2.11 INTENDED USE

MIMAC ITALIA SRL is not liable for any injury caused to people or damage to things arising from any unauthorised changes made to the original operation software granted in use to the Customer.
It is forbidden to use the machine in conditions or for purposes other than those indicated in the manual and MIMAC ITALIA SRL cannot be held responsible for faults or accidents caused by the non-observance of this rule.
Do not use the machine with safety devices that have been tampered with: before starting to work, the operator must make sure that the safety devices, such as the emergency stop and the stop system activated when the mobile guards are opened, are working correctly.
Do not knock against on the shields or placing weights on them: even though the machine has solid shields, they are not suitable for heavy weights or hard knocks.
Machine doesn't be used by unskilled users: this manual must be read carefully before starting to work with the machine.
Do not direct jets of water directly towards the machine, especially towards the guards and the electrical and electronic parts, while washing the machine and the workplace.
The Manufacturer is not liable if one of the following conditions occur:

- incorrect machine use or machine use by unskilled people;
- using the machine in a manner that is not indicated in national regulations;
- incorrect installation;
- power supply faults;
- failure to comply with the instructions;
- negligent maintenance operations;
- unauthorised modifications or interventions;
- using spare parts that are not original or not specific for the model.

To guarantee maximum working reliability, MIMAC ITALIA SRL has accurately chosen the materials and components used to produce the apparatus, which was accurately tested before delivery. Good machine performance over time also depends on correct use and suitable maintenance in line with the instructions given in this manual.

2.12 NOISE WARNINGS

The dropping machine does not exceed an equivalent continuous noise level of 85 dB(A).
Considerations in compliance with Directive 89/392/EEC
No special precaution is required by the operator.
The indicated noise level is an emission level and does not necessarily represent a safe working level.
There is a link between the emission and exposure levels, but it cannot be used to determine if special precautions are necessary. The factors that influence the true level of exposure of the work force include the characteristics of the working environment, the other sources of noise, etc., for example the number of machines and the other processes close by. In addition, the permitted exposure level can vary from one country to another. This information allows the machine user to evaluate the danger and risks in a better manner.
The machine user and the employer must respect laws regarding operator protection against the daily personal exposure to noise, with the possible use of personal protection equipment (headphones, etc.) according to the total noise level present in the work area.

2.13 CLOTHING

As far as clothing is concerned, operators must adhere to food production standards that are current in the European community and/or in their own Country.
In a simple manner, it is obligatory to:

- wear clothing that is in compliance with health regulations (overalls and headgear that cover hair completely);
- wear disposable sterilised gloves;
- wear accident-prevention footwear that is suitable for the movements to be carried out;
- wear disposable masks that cover the mouth and nose.

3 SAFETY

3.1 GENERAL INFORMATION

The machine was designed to work safely. All commands are given using the touchscreen panel and the push-button present on the control panel.
The emergency push-button inhibits all machine functions; to reset them release the emergency push-button and press the re-establishment push-button. No component starts moving again if only the emergency push-button is released.
The stability of the whole machine is sufficient to guarantee use in the indicated operating conditions without risks of overturning, falling or unexpected movements.
Do not tamper with or eliminate the safety devices that are installed on the machine.
Periodically check the effectiveness of the safety systems.
Do not damage or eliminate the safety signals that are applied to the machine; if a safety signal is damaged or missing, immediately inform the person in charge of company safety and ask for its replacement.
If operators tamper with the safety devices, the Manufacturer is not liable for any resulting injury to people or damage to things. The operator becomes the only person responsible when facing competent bodies.
If danger arises for people or things, press the emergency push-button.

3.2 DESCRIPTION OF PICTOGRAMS

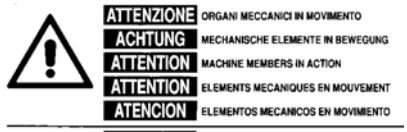

ATTENTION! Machine members in action



BE CAREFUL to your hands



DO NOT remove safety devices



DO NOT clean, grease or adjust the elements of the machine when they are in action



DO NOT clean the machine using water jets



ATTENTION! Hands crush hazard

3.3 DESCRIPTION OF SAFETY DEVICES

3.3.1 FIXED GUARDS

They are fixed with screws and can be removed only using the appropriate tools, which must only be used for maintenance operations; when maintenance is finished the guards must be correctly repositioned.

3.3.2 MOVABLE GUARDS

They are connected to safety microswitches or photocells which cut in automatically whenever the covers are opened. The machine can starts the production again when the movable guards are closed.

3.4 DISPOSAL OF SECURITY DEVICES AND SIGNALS

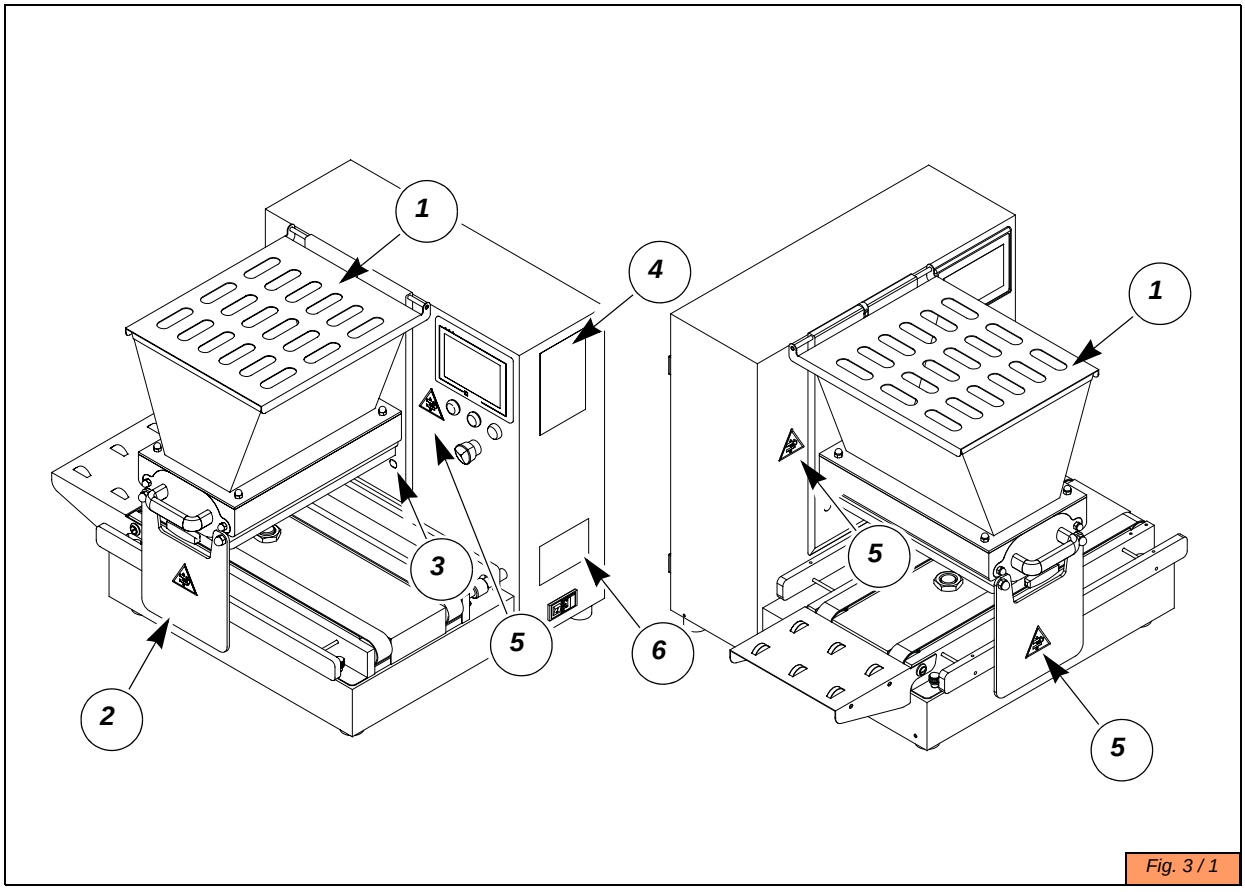

Fig. 3 / 1

1. Hopper movable guard
2. Movable front guard
3. Photocell
4. Main pictogram
5. Pictogram “Hand crush hazard”
6. Information plate

3.5 RESIDUAL RISKS

While using the machine for production or maintenance, the residual risks present are possible crushing of the hands between the mould and the conveyor or between the mould and the tray positioned above the conveyor.

4 MACHINE DESCRIPTION

4.1 GENERAL DESCRIPTION

Extremely flexible dropping machine for the production of cookies and pastry in general.
Thanks to its several moulds with nozzles, the dropping machine allows many opportunities in the typology of product and in the choice of the shape.

4.2 IDENTIFICATION

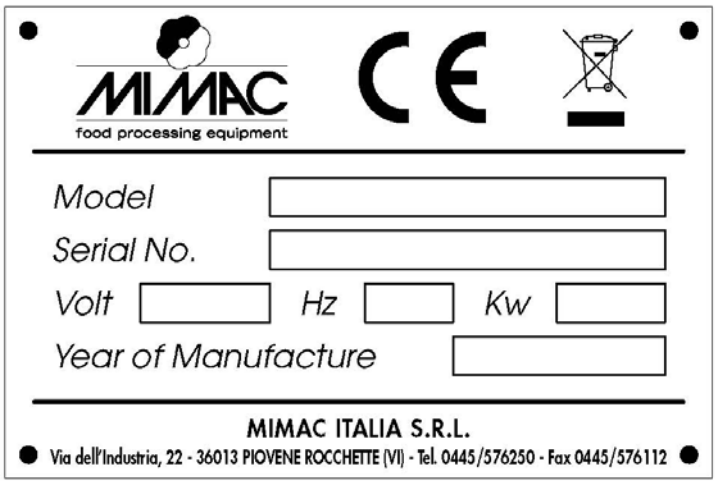

In each machine there is an identification plate in which there are information about the Manufacturer and the machine (model name, serial number, power supply, year of manufacture).

4.3 TECHNICAL SPECIFICATIONS

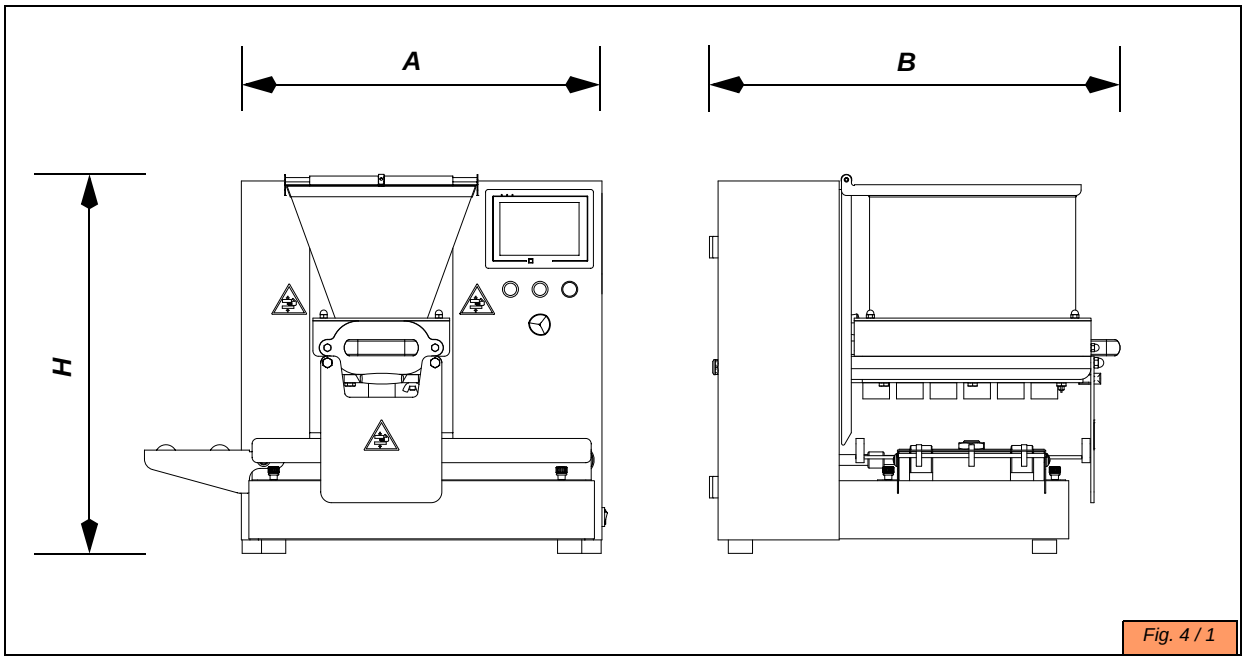

Fig. 4 / 1

	BABYDROP 400	BABYDROP 450
Dimensions **A** **B** **H**	 860 mm 760 mm 700 mm	 860 mm 795 mm 700 mm
Weight	135 kg	140
Hopper capacity **Rollers type dosing unit** **Gears pump type dosing unit**	 25 L 21 L	 26 L 23 L
Power supply	230 V - 50/60 Hz single phase	230 V - 50/60 Hz single phase
Trays size	400x600 mm	450x650 mm

4.4 MAIN COMPONENTS

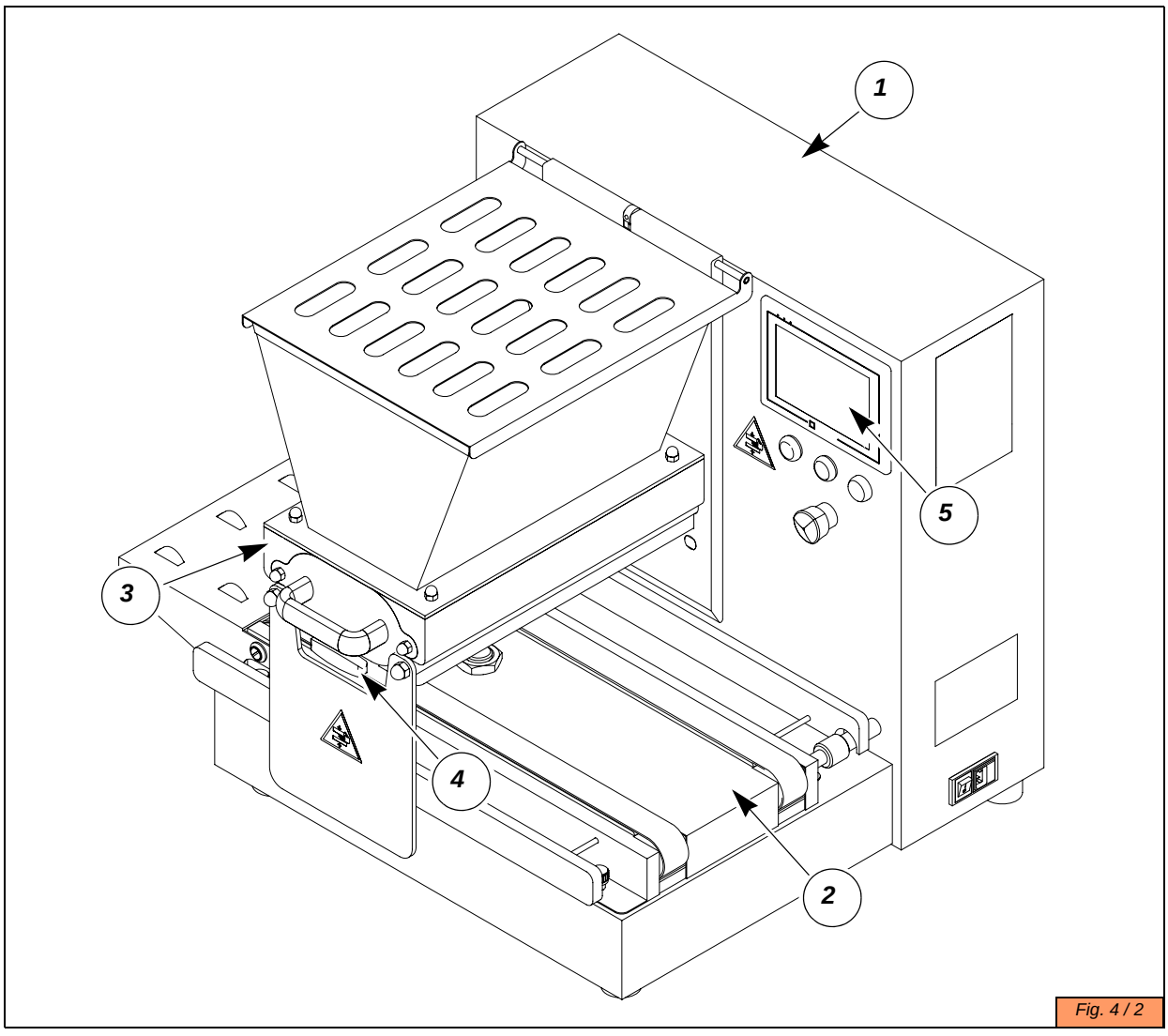

Fig. 4 / 2

1. Structure

The structure is made of a specially treated aluminium alloy and stainless steel, covered by stainless steel panels that are fast and easy to clean and sanitize.

2. Conveyor

The conveyor allows the tray to move forward or backward for an accurate placement and for moving while the machine is dropping.

3. Dosing unit

The dosing unit drops the dough loaded into the hopper. The machine can be equipped with two different type of dosing unit:

- rollers type to handle soft dough (e.g. meringues and éclairs) or harder dough (e.g. shortbread of almond dough);
- gear pump type to handle very soft dough or quite liquid dough (e.g. sponge cake or cup cake).

4. Mould

The mould, equipped with nozzles, gives the wanted shape to the products.

5. Touchscreen panel

The high definition touchscreen panel makes it possible to control the machine by simply touching the keys and the icons that appear on the interactive display.

4.5 EQUIPMENT

The machine can be provided with different dosing units, moulds and nozzles in accordance with the need of the Customer agreed with the order. The standard equipment includes a wrench service kit.

4.6 WORKING AREAS

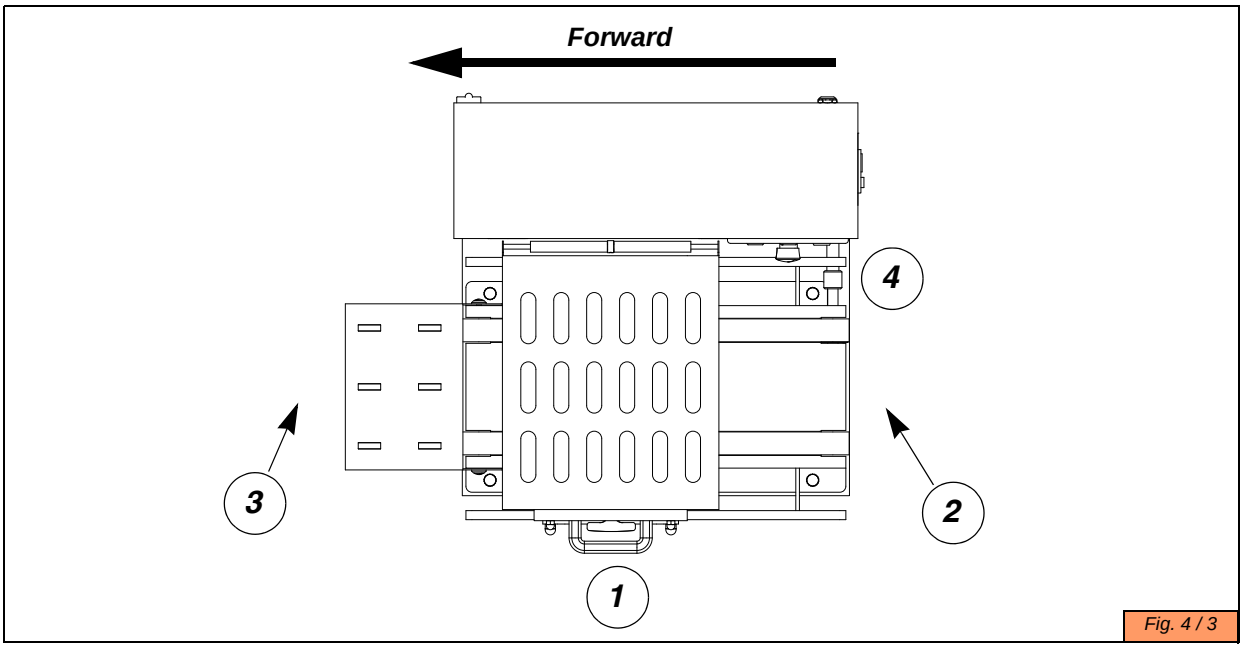

Fig. 4 / 3

The machine can be used by one operator only, who fills the hopper and also loads/unloads the trays.
The following positions are shown in Fig. 4 / 3.

1. Hopper loading
2. Trays loading
3. Trays unloading
4. Control panel

4.7 PRODUCTS OVERVIEW

The machine can make a many type of products set by default. By choosing one of the products available the system loads many specific parameters.

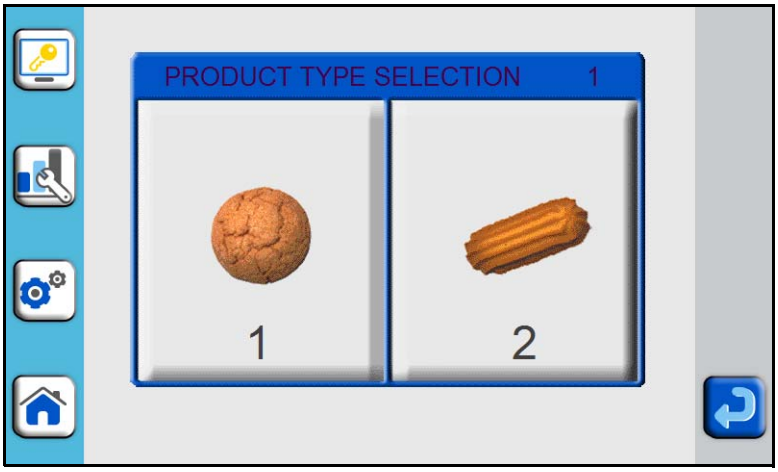

1. Fixed product
2. Long product

5 STARTUP AND FUNCTION CHECK

5.1 POSITIONING

The floor or the bolster on which the machine is to be placed must be suitable for supporting the indicated weights.
Make sure that around the perimeter of the machine there is enough space to allow safe machine use and the safe execution of maintenance operations.
The choice of the area for the positioning of the machine must consider:

- the machine bulk;
- the operator's work position, the tray loading and unloading positions and the control panel position;
- the necessary movements for cleaning both the workplace and the machine;
- the necessary space for carrying out maintenance.

5.2 POWER CONNECTION AND EARTHING

The power connection is always at the cost of the Customer, who also assumes the responsibility of the operation. In addition, it is a precise responsibility of the Customer to protect the power conductors and to provide an efficient and reliable earthing system.

The electric installer must be specialised in these types of operation and must presumably have all the technical and regulatory notions for carrying out the work in a workmanlike manner.
The machine must be connected to the electric circuit of the installation area in a manner that complies with current directives (CEI-EN6 0204-I, CEI-EN 60349-I) and regulations.
The power cable must be kept far from moving or hot parts. It must also not hinder the movement of people and materials in the installation area.
Make sure the machine voltage indicated on the identification plate corresponds to the line voltage of the work premises. If this is not the case, do not connect electrically but contact the Supplier or the Manufacturer immediately.
The machine must be connected to earthing that has been prepared by the Customer in compliance with current directives (Italian Leg. Decree 547/55 - CEI EN 60204-1 - EN 60445).
The connecting terminals can be found inside the electric panel as specified in the wiring drawings.
Use the regular earthing system; do not use the gas or water pipes or other unspecified metal structures.

5.3 CONTROLS DESCRIPTION

5.3.1 CONTROL PANEL

At operator's disposal there is the control panel where he can perform all the operations related to the set-up and the control of the machine.
To stop the machine, there is the Stop push-button, the Emergency push-button and the safety microswitches placed on the movable panels. To temporarily stop the production, it must be used the Stop push-button. In case of danger stop immediately the machine pressing the Emergency push-button.

	Description	Colour	Function
1	Touchscreen panel	-	Programming / loading of products to be made
2	Re-establishment push-button	Blue	General re-establishment of the machine to make it ready to start the production
3	Stop push-button	Red	It stops the production
4	Start push-button	Green	It starts the production
5	Emergency push-button	Red/Yellow	Emergency stop of the machine by the security circuit which puts all the devices offline

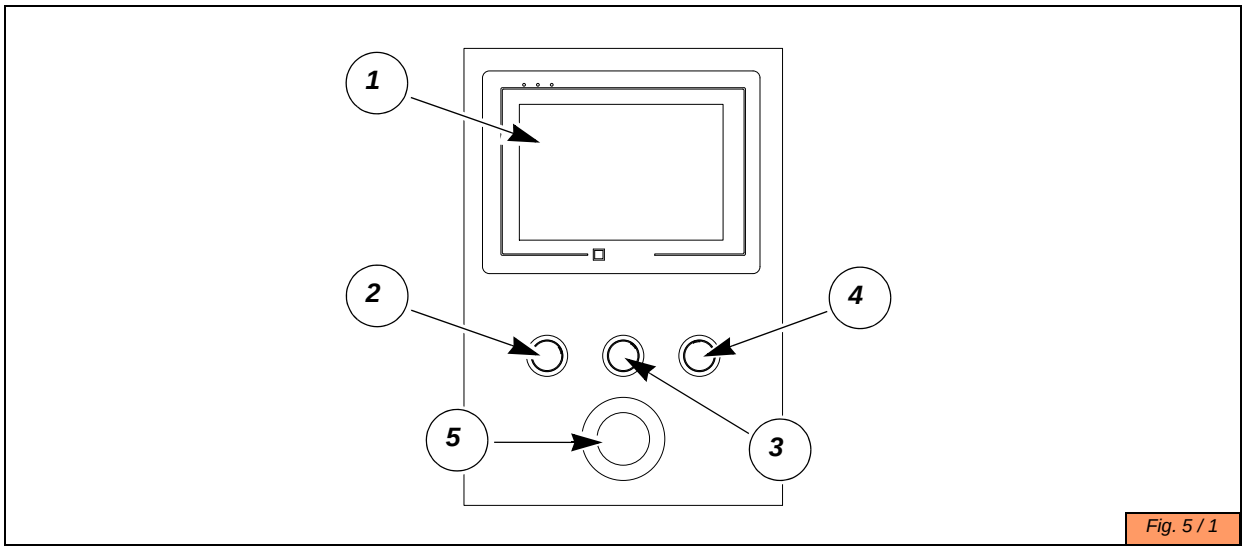

Fig. 5 / 1

5.3.2 TOUCHSCREEN PANEL

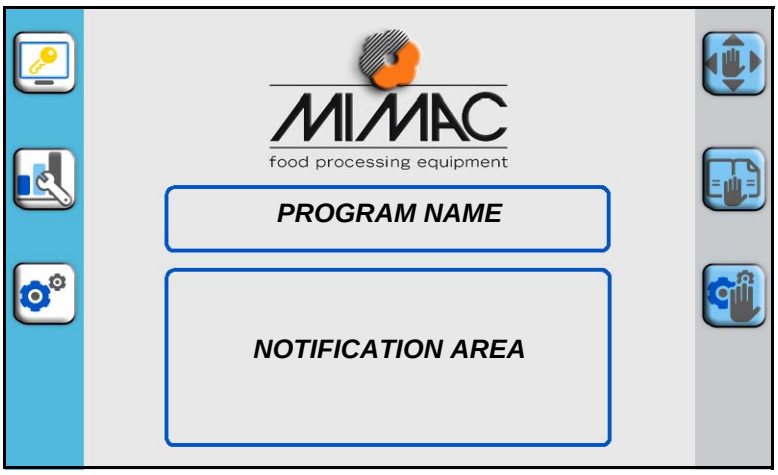

	Password state		Manual movements of the devices
	Technical and diagnostic screens		Programs list
	Technical parameters of the machine		Working screen

5.3.3 MASTER SWITCH

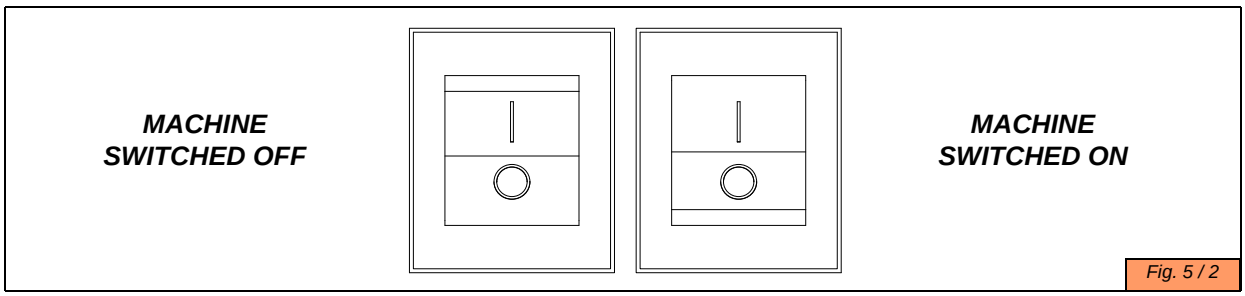

Fig. 5 / 2

5.4 GETTING STARTED

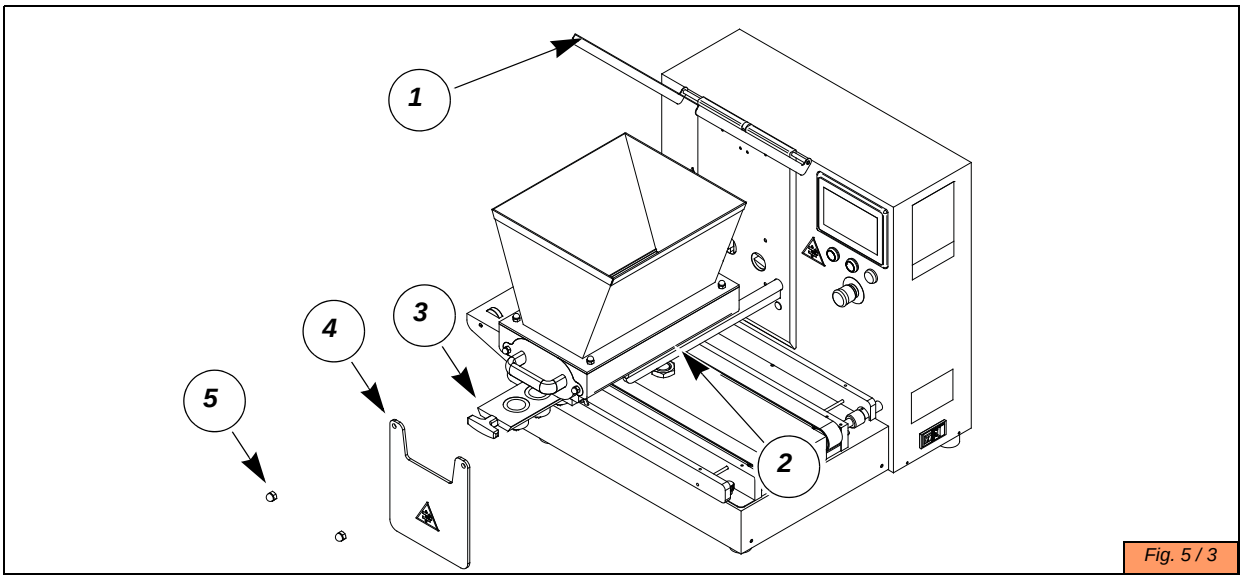

Fig. 5 / 3

5.4.1 PUT ON THE DOSING UNIT AND THE MOULD

1. Unscrew the two front locking knobs (detail 5 Fig. 5 / 3)
2. Remove the front movable guard (detail 4 Fig. 5 / 3)
3. Open the hopper guard (detail 1 Fig. 5 / 3)
4. Put the dosing unit on the support shafts (detail 2 Fig. 5 / 3)
5. Carefully move the dosing unit to the structure aligning the guided roller to the respective clutch
6. Loosen the three locking nuts of the mould guide rail.
7. Insert the mould (detail 3 Fig. 5 / 3) and move it until it is completely against the structure
8. Fasten the three locking nuts of the mould guide rail
9. Insert the front movable guard
10. Fasten the two font locking knobs

5.5 SAFETY DEVICES CHECKING

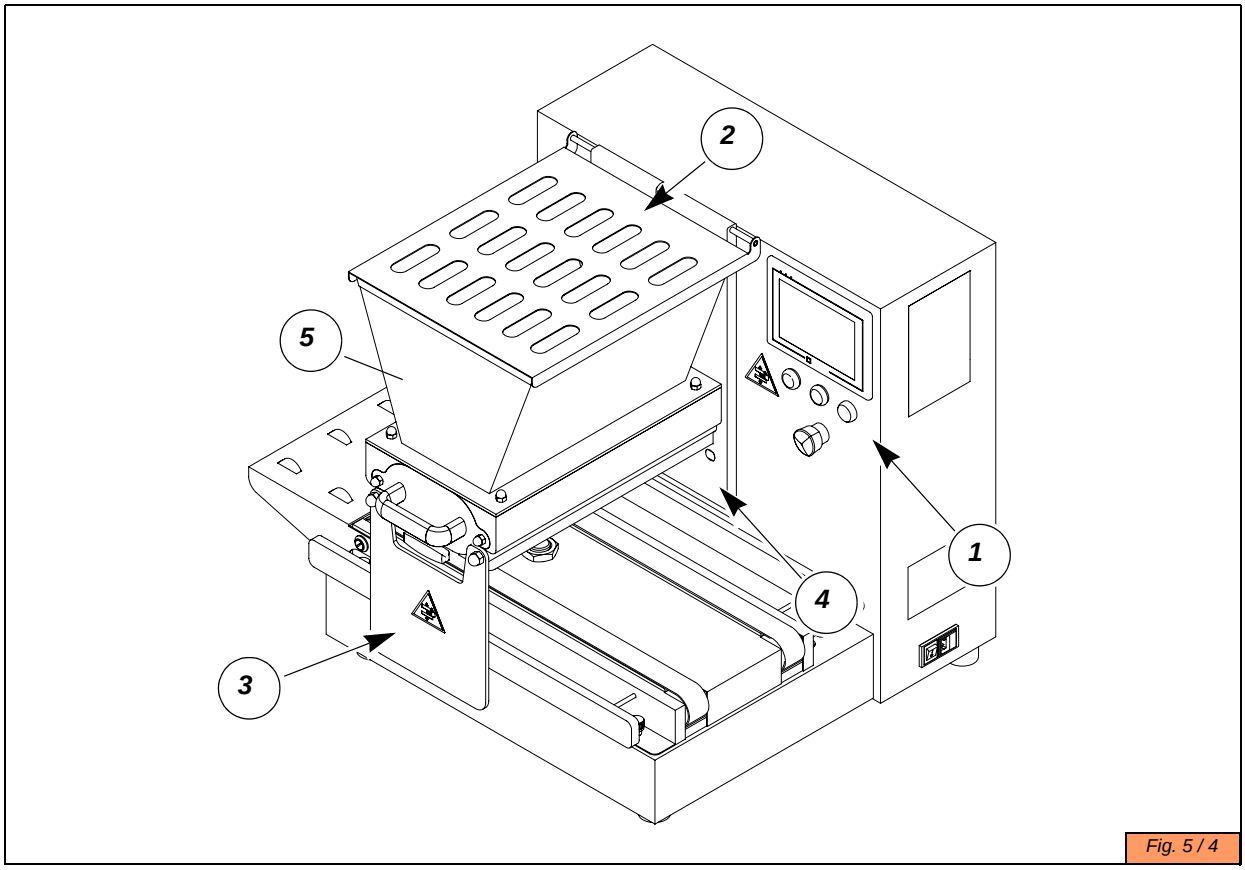

Fig. 5 / 4

The safety devices must always be checked before using the machine:

- press the emergency pushbutton on the control panel (detail 1 Fig. 5 / 4);
- activate the various safety microswitches by opening the movable guards (details 2 and 3 Fig. 5 / 4);
- interrupt the safety photocell beam by placing a solid object between the photocell and the reflector positioned in front of it (details 4 and 5 Fig. 5 / 4).

Each checking operation has to make the machine stop immediatly any movement.
If this does not happen, immediately inform the person in charge of safety.

5.6 EXAMPLES

5.6.1 FIXED PRODUCT

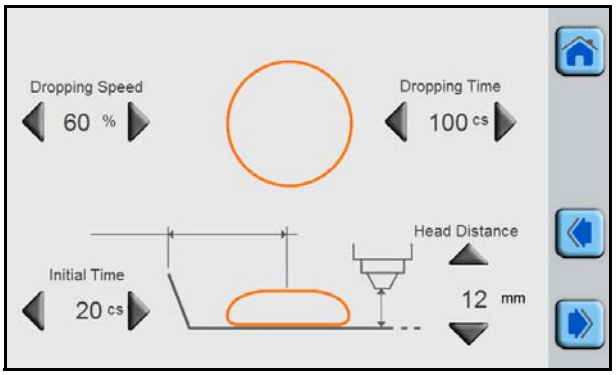

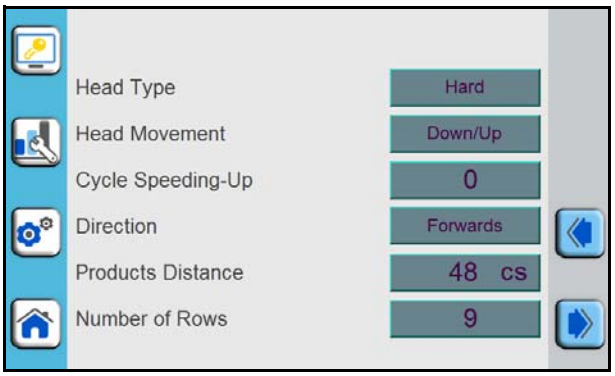

Dropping speed. Speed of the rollers. It adjusts the quantity of product dropped during the dropping time.
Dropping time. Time during which the machine drops.
Initial time. Advancement time from the edge of the tray and the position in whitch the machine starts to drop the first row.
Head distance. Distance between the nozzles and the tray while the machine is dropping.
Head Type. Hard if a rollers type dosing unit is used, Fluid if a gear pump dosing unit is used.
Head movement. Upward/Downward movement of the head after the dropping time:
- Stop down: the machine keeps the head in the lower position; the head goes up and down only between a tray a the following one.
- Down/Up: the head goes up and down after each rows;
- Stop up: the machine keeps the head in the upper position during all the production cycle;

Cycle speeding-up. It allows the concurrent movement of both the tray and the head between two consecutive rows (0 = cycle speeding-up switched off; 1 = cycle speeding-up switched on).
Direction. Direction of the tray movement (see “4.6 WORKING AREAS” pag. 15):
- Forward: the tray goes from the right to the left side of the picture;
- Backword: the tray goes from the left to the right side of the picture;
- Backward/Forward: the operator loads and unloads the trays only on the left side;
- Forward/Backward: the operator loads and unloads the trays only on the right side.

Products distance. Advancement time between a row and the following one.
Number of rows. Number of rows made in each tray.

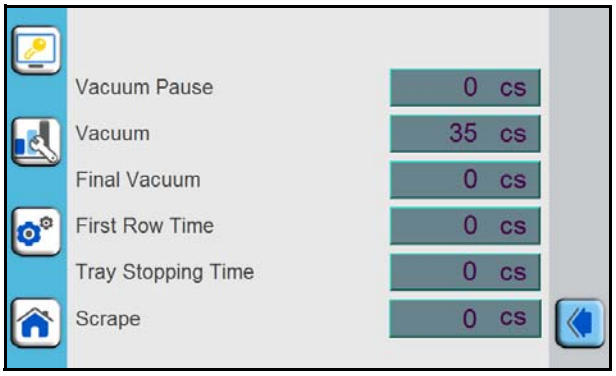

Vacuum pause. Pause time before vacuum.
Vacuum. Vacuum time after each row, made after the dropping time.
Final vacuum. Additional vacuum time made in the end of the tray.
First row time. Additional rotation time of the rollers at the beginning of the first row of each tray to balance the effect of the final vacuum.
Tray stopping time. After the set time, the machine stops the production cycle if a subsequent tray is not detected.
Scrape. Movement of the conveyor made before the detachment of the products to avoid sharp ends:
- a positive value makes a movement that follows the forward direction of the tray;
- a negative value makes a movement in the opposite direction than the tray.

5.6.2 LONG PRODUCT

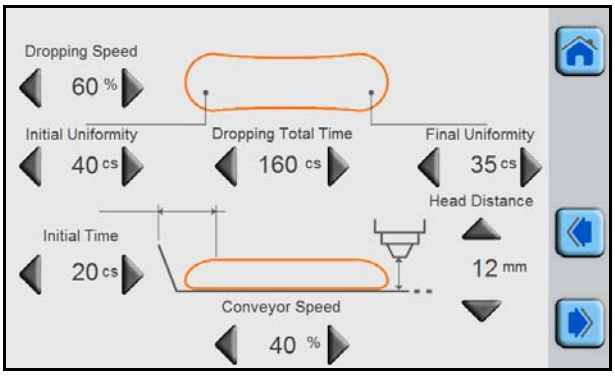

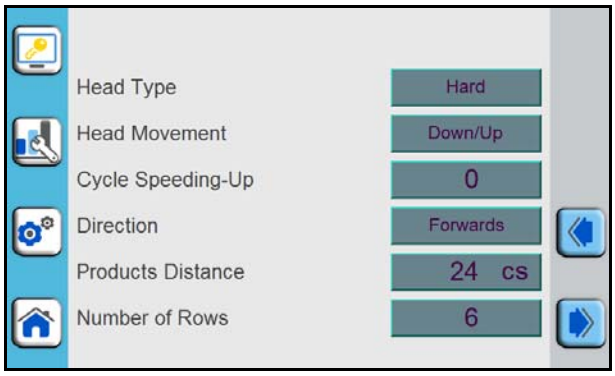

Dropping speed. Speed of the rollers. It adjusts the quantity of product dropped during the dropping time.
Initial uniformity. Dropping time before starting to move the conveyor forward.
Total dropping time. It includes the initial and the final uniformity.
Final uniformity. Dropping time after the conveyor has been stopped.
Initial time. Advancement time from the edge of the tray and the position in whitch the machine starts to drop the first row.
Head distance. Distance between the nozzles and the tray while the machine is dropping.
Conveyor speed. Tray forward speed during the dosing time.
Head Type. Hard if a rollers type dosing unit is used, Fluid if a gear pump dosing unit is used.
Head movement. Upward/Downward movement of the head after the dropping time:
- Stop down: the machine keeps the head in the lower position; the head goes up and down only between a tray a the following one.
- Down/Up: the head goes up and down after each rows;
- Stop up: the machine keeps the head in the upper position during all the production cycle;

Cycle speeding-up. It allows the concurrent movement of both the tray and the head between two consecutive rows
(0 = cycle speeding-up switched off; 1 = cycle speeding-up switched on).
Direction. Direction of the tray movement (see “4.6 WORKING AREAS” pag. 15):
- Forward: the tray goes from the right to the left side of the picture;
- Backword: the tray goes from the left to the right side of the picture;
- Backward/Forward: the operator loads and unloads the trays only on the left side;
- Forward/Backward: the operator loads and unloads the trays only on the right side.

Products distance. Advancement time between a row and the following one.
Number of rows. Number of rows made in each tray.

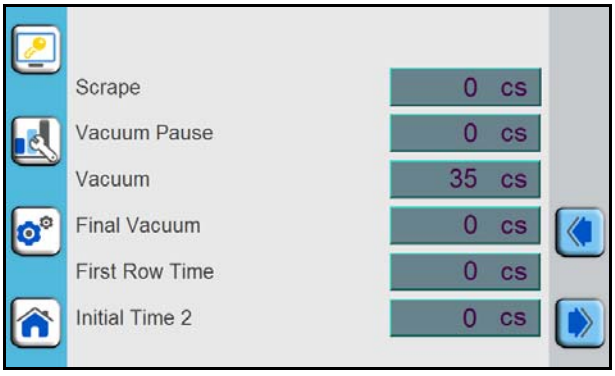



Scrape. Forward/backward moving time before the detachment of the products to avoid sharp ends.
- a positive value makes a movement that follows the forward direction of the tray;
- a negative value makes a movement in the opposite direction than the tray.

Vacuum pause. Pause time before vacuum.
Vacuum. Vacuum time after each row, made after the dropping time.
Final vacuum. Additional vacuum time made in the end of the tray.
First row time. Additional rotation time of the rollers at the beginning of the first row of each tray to balance the effect of the final vacuum.
Initial Time 2. Parameter used for the production of a single sheet of sponge cake in the whole tray. It allows to adjust the initial dropped quantity of product. It must to be greater than it has been set in Initial time.
Tray stopping time. After the set time, the machine stops the production cycle if a subsequent tray is not detected.

5.7 HOW TO START THE PRODUCTION

To start the production proceed as follows.

- Plug in the power cable.
- Insert the dosing unit, the mould and the nozzles which have been selected according to the work to be carried out.
- Switch on the machine using the master switch.
- Load the batter into the hopper.
- Make sure the emergency push-button is not pushed, otherwise release it.
- Place the dough under pressure.
- Load the required program, or create a new one.
- Start the production pushing the Re-establishment push-button and then the Start push-button.

To keep the machine working continuously the operator has to load a new tray while the previous one is in process, spacing them out about 5 cm apart.

If the distance between two subsequent trays is greater then the value set in the parameter Tray Stopping Space, the machine stops working after the tray in progress has been completed.

5.7.1 HOW TO LOAD THE BATTER INTO THE HOPPER

- Stop the machine using the Stop push-button.
- Open the hopper guard.
- Put the batter into the hopper.
- Close the hopper guard.

To have the best result it is recommended to load the hopper not over 60-70% of the volume.

5.7.2 HOW TO PUT THE BATTER UNDER PRESSURE

In order to adjust the quantity dropped in the first rows, the machine allows the operator to pressurise the dough. The procedure has to be done only once after the machine has been switched on and the dough has been loaded into the hopper. To pressurise the dough preceded as follows:.



Press the icon  to enter the manual movements screen.

Manually put an empty tray under the dosing unit.
Push the Re-establishment push-button.

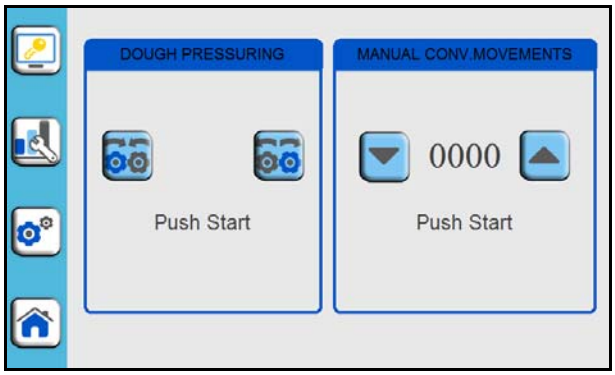

To make the dough under pressure press the icon:

 if the rollers type dosing unit is used;

 if the gears pump dosing unit is used.

Keep pressed both the icon and the Start push-button until the dough starts to go out from the nozzles. After that, manually make a vacuum phase keep pressed the other icon and the Start push-button at the for a while to prevent undesired outflow of dough.
When done, manually take the tray out and press the icon 

5.8 MACHINE EMERGENCY STOP

Pressing the emergency push-button the machine immediately stops in safety mode.

This push-button must only be used in emergency situationS!
Do not use the Emergency push-button for the normal stop of the production.

To re-start the machine make sure the emergency situation has been removed then reset the Emergency push-button, press the re-establishment push-button and then press the Start push-button.

After an emergency stop the work cycle begins automatically from where it was stopped unless it is reset using the Stop push-button or the tray has been removed.

5.9 PASSWORDS MANAGEMENT

The touch screen control panel has two protection levels. The first level prevents unwanted accesses to the recipes programming pages making the User Password enable. This protection level can be disabled or timed. The second level cannot be removed and prevents accesses by unauthorised people into the machine data menu if they don't have the Machine Password.

The machine is supplied with the User Password disabled.

5.9.1 MACHINE PASSWORD

The machine password can be neither disabled nor changed, and its only purpose is to enter the Machine Data Menu.

Parameters inside Machine Data Menu are set by our technicians during the machine test. Unauthorized people mustn't change these parameters for any reason. The Manufacturer is not responsible for failures or other damages assignable to theirs variation.

To enter the Machine Data Menu using the machine password proceed as follows.

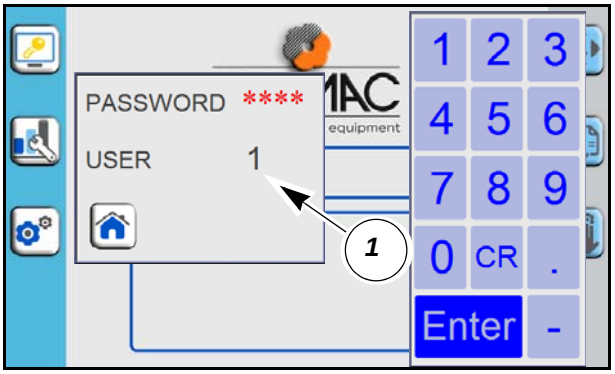

In the main screen press the icon  to make the log-in pop-up appear.

Press on the number "1"(detail 1).

Using the keyboard type "2" instead of "1".

Press the button Enter to confirm.

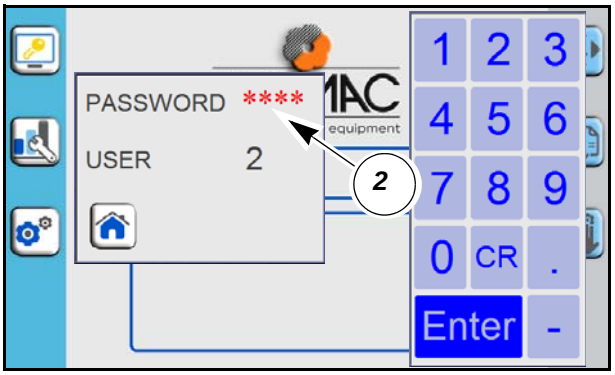

Press on the stars (part. 2) to type the password.

The machine password is 2507.

Press the button Enter to confirm.

Press the icon  to close the pop-up.

To enter the Machine Data Menu Press the icon  again.

5.9.2 HOW TO ENABLE AND DISABLE THE USER PASSWORD

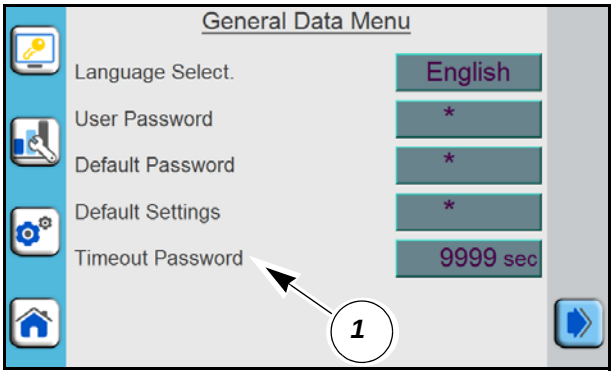

Enter the Machine Data Menu following the instructions in section "5.9.1 MACHINE PASSWORD" pag. 25 and look for Timeout Password (detail 1) parameter in the General Data Menu section.

To **disable the User Password** press the corresponding button on the right side, insert the value “9999” using the numeric keyboard.
Disabling this security level the user can create and modify programs without any limitation.

To **enable the User Password** press the corresponding button on the right side, insert the value “0” using the numeric keyboard.

Enabling this security level makes the key icon  red.

Enabling this security level the user scroll the programs list and load programs without any limitation. To access the product programming screens the User Password set is needed.

Setting a value between 1 and 9998 the **User Password is timed**.
The entered value is the time, in second, during witch the first security level remains disabled. After that time the user has to authenticate himself again using the User Password to access the programming screens.

The default User Password is “2569”.
The User Password is disabled by default.

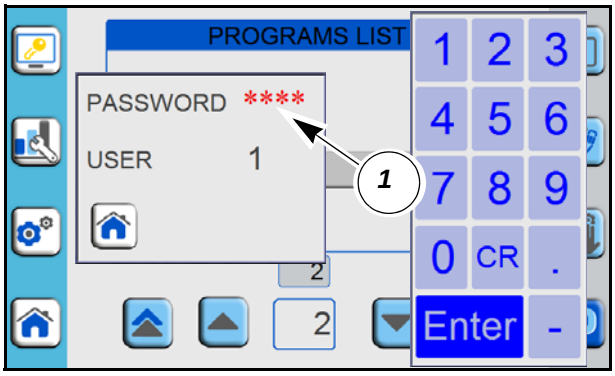

With the User Password enable to access the product programming screens the user has to insert that password.
When the pop-up appears press on the stars (detail 1), then insert the User Password using the numeric keyboard.

5.9.3 HOW TO MODIFY THE USER PASSWORD

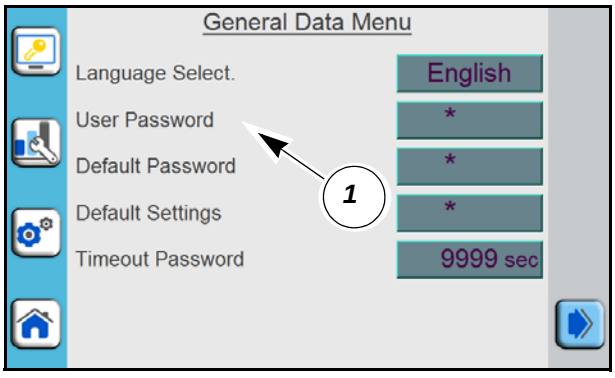

Enter the Machine Data Menu following the instructions in section “5.9.1 MACHINE PASSWORD” pag. 25, and look for User Password (Detail 1) parameter in the General Data Menu section. Then press on the corresponding button on the right side.

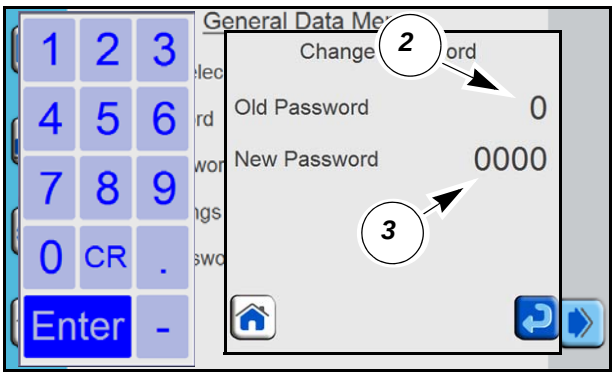

When the pop-up Change Password is shown press next to Old Password (detail 2) and insert the old User Password.
Then press next to New Password (detail 3) and insert the new desired User Password.
When done press  and then  to exit.

5.10 TECHNICAL AND DIAGNOSTIC MENU

5.10.1 MACHINE DATA MENU

Parameters shown in this section are set during the testing phase carried out by our technicians and the values must not be modified by unauthorised people. The Manufacturer is not liable for breakages, faults or any other thing that can be traced back to the tampering with or modification of these parameters.

To enter the Machina Data Menu follow the istructions in section "6.9 GESTIONE DELLE PASSWORD" pag. 39.

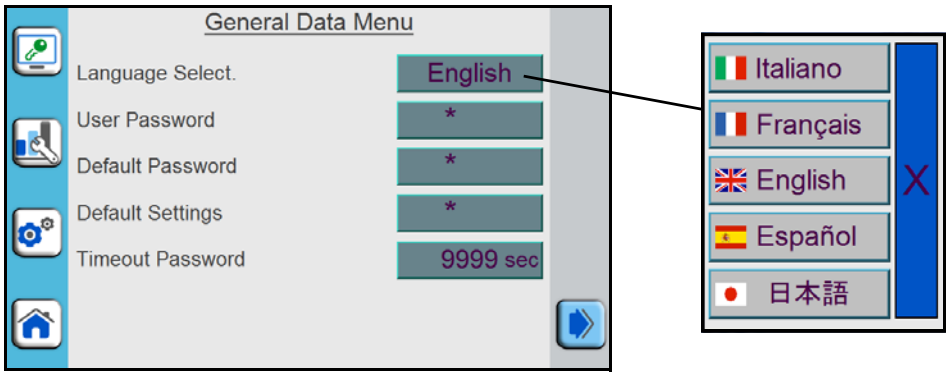

Language Selection. Select the required language.
User Password. Modify the User Passworf (default password is 2569).
Default Password. Users cannot access this parameter.
Default Settings. Enter the Machine Password to restore the machine to factory settings.
Timeout Password. Enable/disable the User Password.

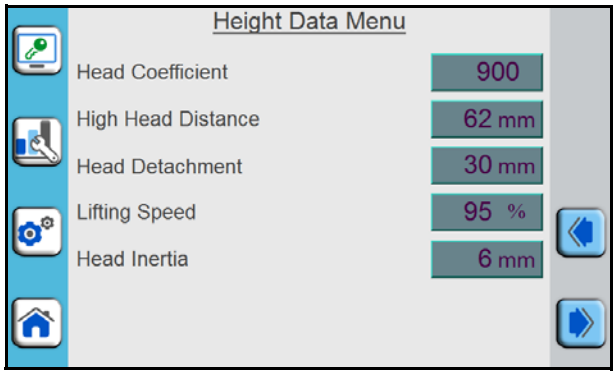

Head Coefficient. Transformation coefficient of the impulses of the encoder.
High Head Distance. Maximum working distance between conveyor and nozzles.
Head Detachment. Vertical movement made after the dropping time.
Lifting Speed. Rising/Lowering speed of the head.
Head Inertia. Needed space to make the head stop.

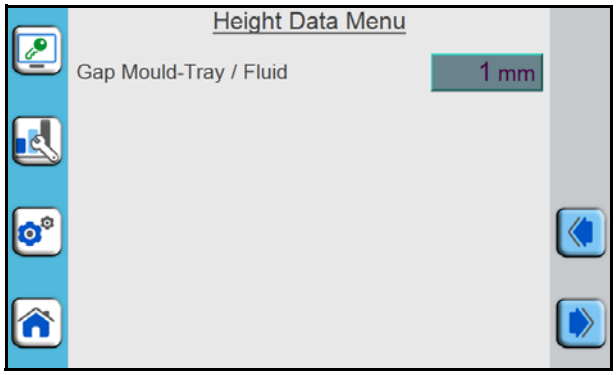

Gap Mould-Tray / Fluid. Gap between rollers dosing unit and gears pump dosing unit.

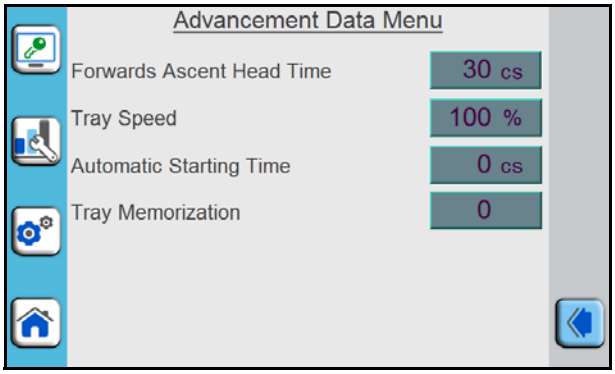

Forwards Ascent Head Time. If the Cycle Speeding-up is seet, time between the beginning of the head rising and the conveyor movement.
Tray speed. Maximun forward speed of trays.
Automatic Starting Time. Pause time between one tray has been completed and the following one goes in process. It let the user to work without push the Start pushbutton.
Tray Memorization. It allows the machine to use the tray sensor only to detect the beginning of the tray and then it works using the tray length set.

5.10.2 TECHNICAL VIDEO

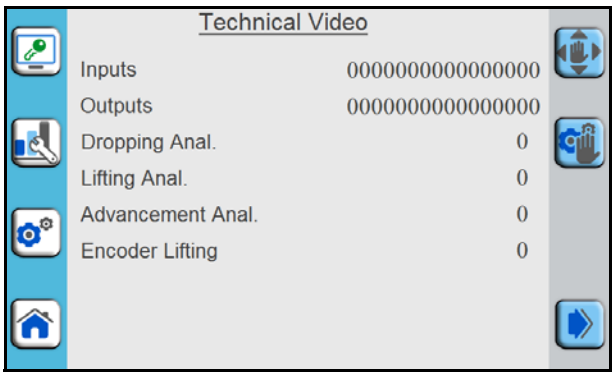

Press the icon  to access to the Technical Video menu.

This section is made by two pages in which it is possible to supervise the state of the machine while solving possible faults.

Inputs: electrical inputs state; see “Electrical Inputs Table”.
Outputs: electrical outputs state; see “Electrical Outputs Table”.
Dropping Analog.: information about the current dropping speed (analog. output 0/10 V).
0 = 0%
10 = 100%
Lifting Analog.: information about the current lifting speed (analog. output -10/+10 V).
-10 = 0%
0 = 50%
10 = 100%
Advancement Analog.: information about the current conveyor speed (analog. output 0/10 V).
0 = 0%
10 = 100%
Encoder Lifting: distance between nozzles and tray (the value shown is reliable only if the machine has already made the preset automatic procedure).

Electrical Inputs Table

Position	Description	Position	Description
1	Extra stroke ascent alarm	9	Dropping inverter approval
2	Head height preset	10	Head inverter approval
3	Extra stroke descent alarm	11	-
4	Tray presence	12	-
5	Hopper guard alarm	13	-
6	Photocells alarm	14	-
7	Start cycle	15	-
8	Emergency pushbutton pressed	16	-

Electrical Outputs Table

Position	Description	Position	Description
1	Clockwise rollers rotation control	9	Ascent head control
2	Anticlockwise rollers rotation control	10	Descent head control
3	-	11	-
4	Cycle approval	12	-
5	-	13	-
6	-	14	-
7	-	15	-
8	-	16	-

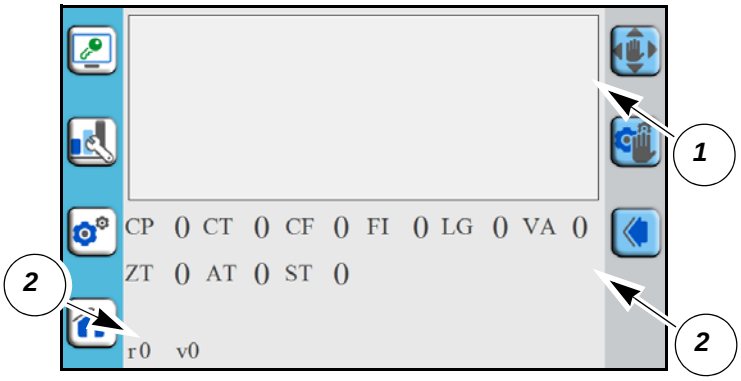

1. System log
2. Program state
3. PLC software release and touchscreen software release

5.11 ALARMS

The indications that follow are useful for identifying and possibly eliminating the causes of faults or irregularities. Please always consider, however, that only qualified and authorised technicians can repair electrical equipment. Repairs carried out incorrectly can endanger user safety and prejudice good machine operation.

EMERGENCY BUTTON PUSHED
Solution:
- Release the emergency pushbutton.
- Push the re-establishment pushbutton and then the start pushbutton to continue the production cycle.

DROPPING INVERTER ALARM
Possible cause:
- Dosing roller speed too high.
- Product to be dosed is too stiff.
- Mechanical fault.

Solution:
- Decrease the dropping speed.
- Make a softer dough.
- Press the start pushbutton to reset the alarm.
- If the alarm continues, consult the help centre.

HEAD INVERTER ALARM
Possible cause:
- Mechanical fault.

Solution:
- Press the start pushbutton to reset the alarm.
- If the alarm continues, consult the help centre.

HOPPER PROTECTION ALARM
Possible cause:
- The hopper guard is open.
- The safety microswitch is fault.

Solution:
- Make sure there are no objects that may be stopping the wire-cut shield from closing.
- Close the hopper guard.
- If the alarm continues, consult the help centre.

PHOTOCELL ALARM
Possible cause:
- The photocell beam has been interrupted.
- The reflectors are worn.
- The photocell is faulty.

Solution:
- Make sure there are no obstacles between the photocell and its reflector.
- Clean the photocell with a soft damp cloth.
- Clean/replace the reflector.
- If the alarm continues, consult the help centre.

START PAUSE
Solution:
- Press the start pushbutton to continue working with the current tray.
- Keep the stop pushbutton pressed for a while to cancel any current operations.

EXTRA STROKE ASCENT/DESCENT HEAD ALARM

To manually move the head the safety circuit must be enabled so press the re-establishment pushbutton before starting the procedure.



Press the icon to load the manual movements screen.

In the box Manual Conveyor Movement press:

- the icon while pushing the Start button in case of “Extra Stroke Descent Head Alarm”;
- the icon while pushing the Start button in case of “Extra Stroke Ascent Head Alarm”.

Keep both the buttons (the arrow icon and the start pushbutton) pressed until the alarm notification disappears.

6 CLEANING

6.1 GENERAL INFORMATION

The operators in charge of cleaning must wear hygienically sterile protective clothing that covers all parts of the body.
Cleaning and hygienization must be carried out in a room that is equipped in compliance with current hygiene regulations.



Do not use tools, knives, blades, etc. unless it's specifically indicated.



We advise using hot water (50 °C), and avoiding the use of detergents and degreasers; carefully dry each component after cleaning. Washing the mould elements at high temperatures is not recommended. MIMAC ITALIA SRL is not liable for any damage and/or deformation that may be caused by temperatures above 50 °C. If the parts are washed in a parts washer, wait until they cool or cool them manually under cold running water.

6.1.1 FOOD HYGIENE REQUIREMENTS

The machine indicated in this manual is legally suitable for working with food at the date on which is sent by the Manufacturer. It only remains suitable in time if care is taken with cleaning, which must be carried out daily, and with machine maintenance and checks. Any machine part that comes into contact with an item of food (dough, flour, water, margarine, etc.) has to be replaced if it appears altered, worn or if it's no longer suitable for the correct and hygienic treatment of the food.
The Manufacturer is not liable for any damage caused if the machine is not cleaned, or if it is cleaned incorrectly, and/or if maintenance is not carried out or is carried out incorrectly.

6.1.2 CLEANING OF PARTS WHICH DO NOT COME INTO CONTACT WITH FOOD

Frame, panels and in general all visible parts that do not come into direct contact with the product should be cleaned daily at the end of the working day using a cloth and a degreasing and sanitizing detergent.
These operations can be carried out by unqualified staff, who nevertheless must be familiar with the possible residual risks and the cleaning methods.



Do not use water jets to clean the machine.

To clean steel surfaces use water or denatured alcohol, rub with a clean cloth, then pass over the cleaned area with a jet of compressed air or a dry cloth.
To clean the control panel, touchscreen included, use a soft and dry cloth.
If it is necessary to clean electric or electronic parts use only a vacuum cleaner (do not use compressed air and/or water for any reason).

6.1.3 CLEANING OF PARTS WHICH COME INTO CONTACT WITH FOOD

The parts that come into contact with the product must be washed daily at the end of the working day; this frequency is necessary because the batter and other products for filling can go off within a short period of time.
Cleaning operations, which require removal of parts, must only be carried out by qualified and authorised technicians.
Unless otherwise indicated, cleaning must be carried out with the machine stopped and disconnected from the mains.

6.2 ROLLERS TYPE DOSING UNIT DISASSEMBLING AND CLEANING

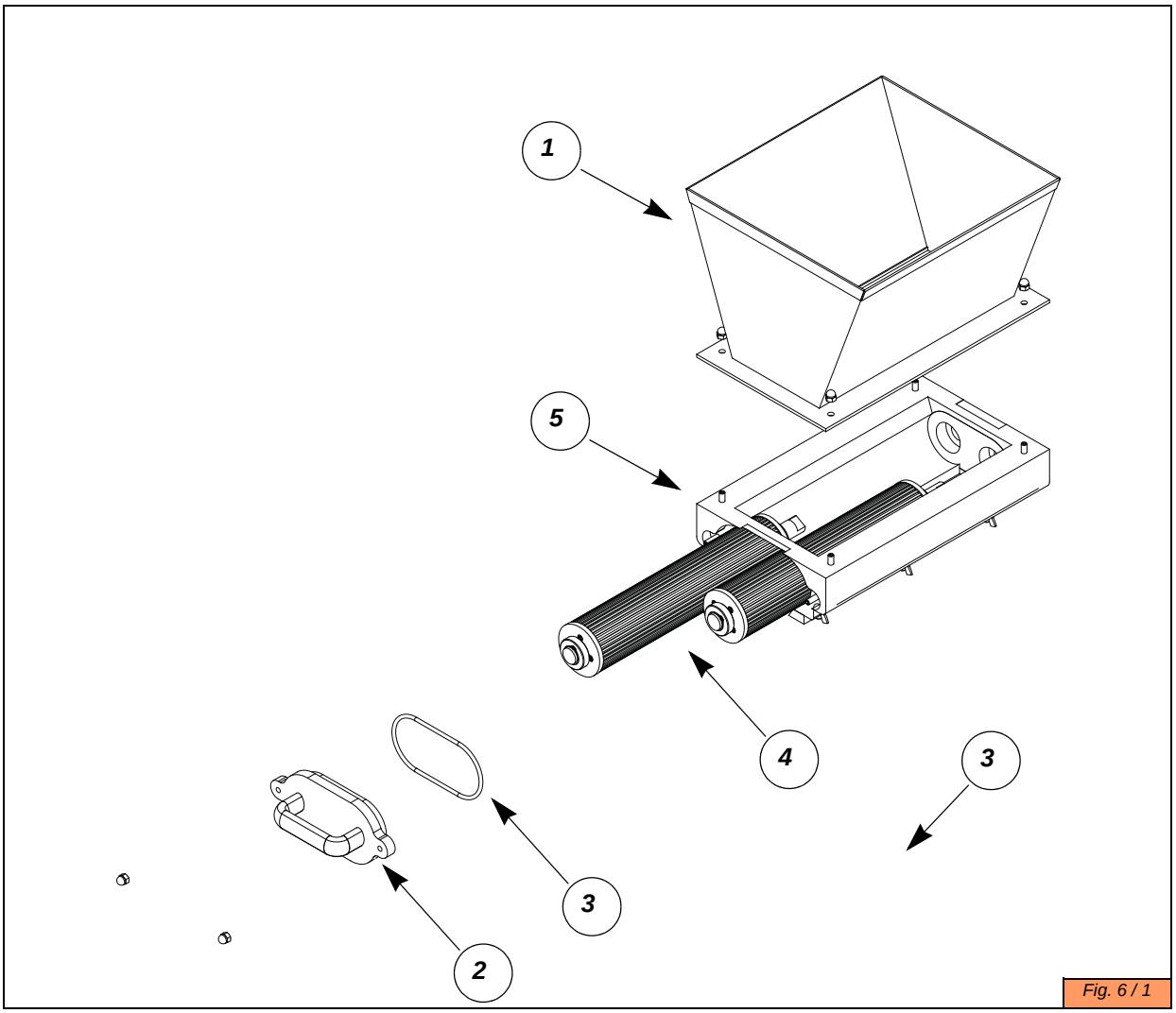

Fig. 6 / 1

1. Disconnect the machine by moving the master switch to position "0".
2. Open the hopper guard, unscrew the two frontal knobs and remove the front movable guard.
3. Remove the mould after unscrewing the fixing nuts.
4. Unscrew the hopper locking nuts and extract the hopper (detail 1 Fig. 6 / 1).
5. Unscrew the locking nuts, remove the front cover (detail 2 Fig. 6 / 1) and the gasket (detail 3 Fig. 6 / 1).
6. Delicately remove the two dosing rollers (detail 4 Fig. 6 / 1).
7. Completely remove the dosing unit from the machine (detail 5 Fig. 6 / 1).
8. Unscrew the locking screw of the back cover, remove the cover and the gasket.
9. Carefully wash all components.

To reassemble the dosing unit, dry the parts and wait for them to cool then follow the instructions given above in reverse.

6.3 GEARS PUMP TYPE DOSING UNIT DISASSEMBLING AND CLEANING

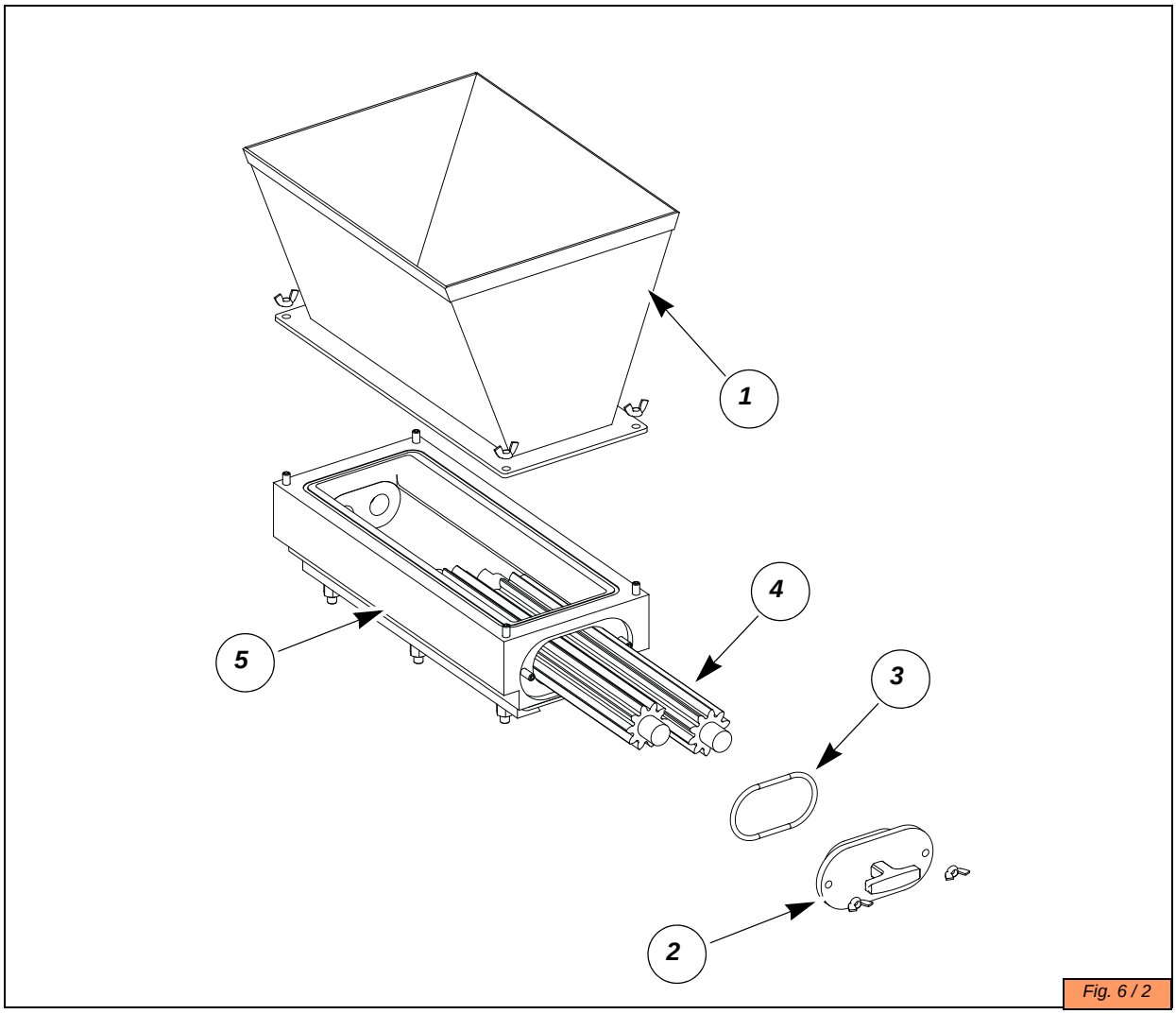

Fig. 6 / 2

1. Disconnect the machine by moving the master switch to position "0".
2. Open the hopper guard, unscrew the two frontal knobs and remove the front movable guard.
3. Remove the mould after unscrewing the fixing nuts.
4. Unscrew the hopper locking nuts and extract the hopper (detail 1 Fig. 6 / 2).
5. Unscrew the locking nuts, remove the front cover (detail 2 Fig. 6 / 2) and the gasket (detail 3 Fig. 6 / 2).
6. Delicately remove the two dosing rollers (detail 4 Fig. 6 / 2).
7. Completely remove the dosing unit from the machine (detail 5 Fig. 6 / 2).
8. Unscrew the locking nuts of the back cover, remove the cover and the gasket.
9. Carefully wash all components.

To reassemble the dosing unit, dry the parts and wait for them to cool then follow the instructions given above in reverse.

6.4 STATIONARY MOULD DISASSEMBLING AND CLEANING

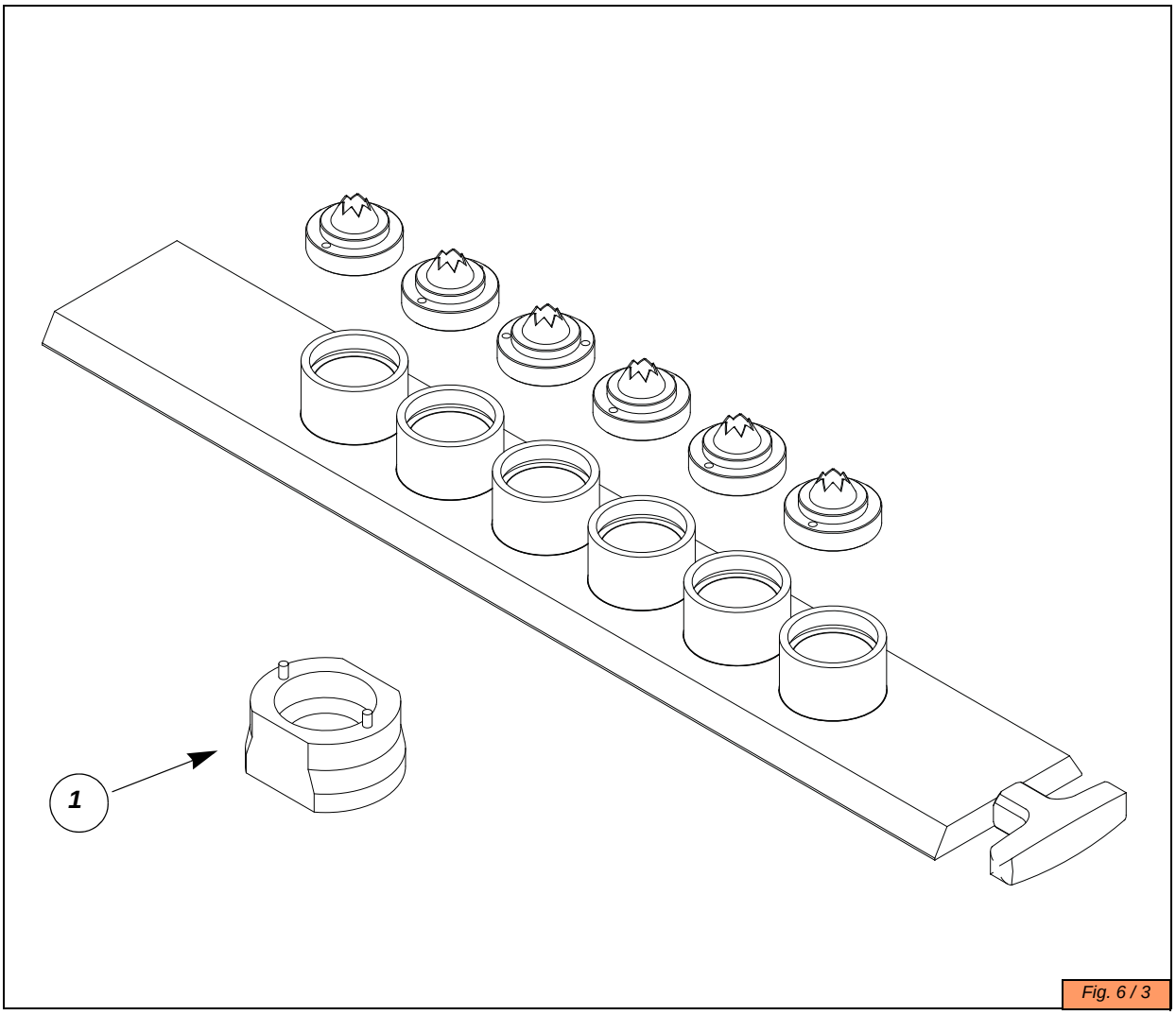

Fig. 6 / 3

Wash the mould carefully after every work change proceeding as follows:

1. Unscrew the nozzles from the mould using the supplied too (detail 1 Fig. 6 / 3).
2. Clean every part of the nozzles.
3. Clean every part of the mould.
4. Dry well and wait for the mould and the nozzles to cool.
5. Reassemble everything.

7 MAINTENANCE

7.1 GENERAL INFORMATION

Maintenance operations must only be carried out by qualified and authorised technicians.
Unless otherwise indicated, maintenance must be carried out with the machine stopped and disconnected from the mains (machine in a safety condition).
If it is necessary to start the machine with guards removed to make maintenance/adjustment the maintenance technician must keep unauthorized persons away.
Before starting maintenance, a sign with “MAINTENANCE BEING CARRIED OUT” must be placed.
Wear goggles and mask when using compressed air for cleaning, and do not direct the jet towards skin or eyes.
Use gloves and goggles when handling detergents or lubricants.
Do not dispose of liquid lubricants in the environment. Dispose of toxic substances using the regular recovery channels made available by the local administration.
After any pertinent activity and before preparing the machine for operation, the maintenance technician must:

- make sure there are no foreign bodies inside the machine;
- reset safety devices and/or shields that may have been removed during maintenance;
- make sure the mobile shields and relative alarms function correctly.

7.2 WEARABLE PARTS

In the machine all those parts that move or undergo friction are subject to mechanical wear. By way of example parts subject to wear are gaskets, bearings, conveyor belts, safety microswitch and gears.

7.3 ROUTINE MAINTENANCE

Routine maintenance program includes inspections, checks and verifications that can be carried out directly by the operator and/or by people in charge of normal company maintenance.
Usually routine maintenance operations can be performed without using specific instruments or tools.
Routine maintenance includes:

- general visual check of the integrity of the machine;
- testing of the machine functioning (motor, buttons and safety devices);
- checking the correct insertion and fixing of the equipment;
- cleaning process waste.

7.4 SPECIAL MAINTENANCE

Special maintenance program includes replacement, adjustment and lubrication operations carried out by trained technicians in order to avoid irregularities and faults.
Usually special maintenance operations can be performed using specific instruments or tools.
Special maintenance includes:

- checking the machine efficiency;
- lubrication of moving parts;
- cleaning of the electrical system.

7.5 MAINTENANCE OF ELECTRICAL AND ELECTRONIC DEVICES

Usually neither ordinary nor special maintenance operation are required on electrical and electronic devices. If it should be necessary to perform any maintenance work on electrical or electronic equipment, including engines, gearboxes and motors, it must be done by trained people that have technical knowledge and know all the regulations to make all operations properly.

7.6 SPARE PARTS REQUESTING

To request spare parts please contact customer service by communicating all the information about the machine (serial number, model name, year of construction) and the code of spare parts needed referring to the tables attached to this manual.

7.7 STORAGE

If for some reason it is necessary to store the machine with or without its packaging, proceed as follows:

- Place the crates in a covered area and protect them against humidity, dust and heat sources; also make sure that the temperature in the storage area does not change excessively.
- Make sure that the moving means inside the premises cannot come into accidental contact with the machinery.
- Periodically check the protected parts.
- Never stack the cases.
- If the machine is not packed, keep it lifted from the ground using pieces of wood and cover it with sheets to stop dust and dirt from accumulating.

7.8 DISMANTLING AND SCRAPPING

In compliance with art. 13 of Italian Legislative Decrete no. 151 dated 25 July 2005 Actuation of Directives 2002/95/EC, 2002/09/EC and 2003/108/EC regarding reductions in the use of dangerous substances in electric and electronic apparatus and the elimination of refuse", the symbol of the barred rubbish container (Fig. 7 / 1) that can be found on the apparatus or on the packaging means that the product at the end of its productive life must be separated from other refuse.

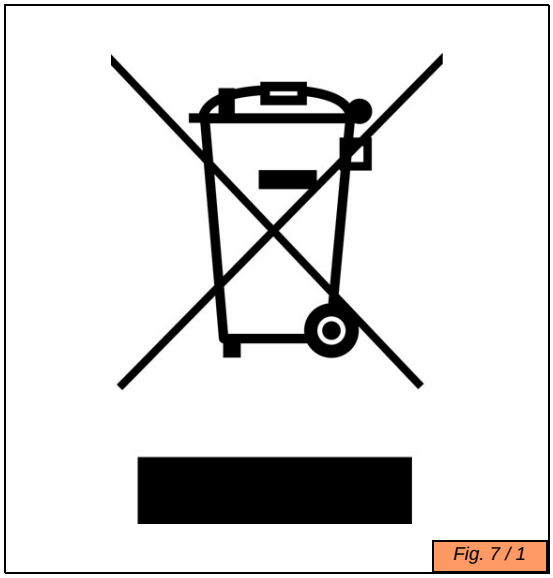

Fig. 7 / 1

The separate collection of this apparatus when it has reached the end of its working life is organised and managed by the Manufacturer. Users who wish to scrap this apparatus personally must contact the manufacturer and follow the system used by same for the separate collection of the apparatus when it has reached the end of its working life.
Separating refuse correctly helps avoid possible negative effects on the environment and health, and favours the re-use and/or recycling of the materials used to produce the apparatus.
Administrative sanctions indicated by laws in force are applied to holders who dispose of the product in an abusive manner.

ATTACHMENTS

MAINTENANCE RECORDINGS TABLE

Date	Working time	Job description	Signature

MAINTENANCE RECORDINGS TABLE

Date	Working time	Job description	Signature

SPARE PARTS REQUEST FORM

Code	Quantity	Notes

SPARE PARTS REQUEST FORM

Code	Quantity	Notes

food processing equipment

MIMAC ITALIA S.R.L.
Via dell'Industria 22 36013 PIOVENE ROCCHETTE (VI) ITALY
Tel: +39 0445 576250 Fax: +39 0445 576112
E-mail: info@mimac.com Internet: www.mimac.com
Capitale sociale €10.400,00 I.V.
P.IVA e Codice fiscale IT02410140244
R.E.A. Vicenza n.228850
Iscrizione registro A.E.E. n°IT8020000002354