Varimixer

TEDDY

CHEFS DEPOT
Culinary Supplies

ATTACHMENT DRIVE TEDDY is also available in white with an attachment drive for mounting a stainless steel meat mincer.

EASY CLEANING Its die-cast, rounded design and no external screws or openings make TEDDY easy to clean.

SAFETY SCREEN A fixed grille and a detachable filling tray and splash guard protect both the operator and the ingredients, while allowing the mixing process to be monitored.



EFFECTIVE TOOLS TEDDY comes with a 5-litre stainless steel mixing bowl with a lid, a wire whip made of 2.5 mm wire, a beater and a specially designed hook which ensures dough is kneaded and turned to perfection. All accessories are made of stainless steel and are dishwasher-safe.

AFFIXED BOWL The bowl is held effectively in place during operation by a single lever.

EASY OPERATION Speed is infinitely adjusted using the pass-through control knob, which allows TEDDY to be operated from either side. The knob is also the click-lock and hinge point when the mixer head is tilted back to change tools.

GOOD STABILITY A wide footprint and suction cups ensure the mixer is stable during operation.

VARIMIXER TEDDY 5L COLOR OPTIONS



Pure white



Racing red



Piano black



Silver grey

OPTION – ATTACHMENT DRIVE



Pure white - with attachment drive



Meat mincer, stainless steel, 62 mm

TOOLS INCLUDED



Whip, stainless steel

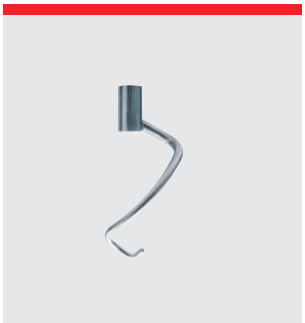

Hook, stainless steel

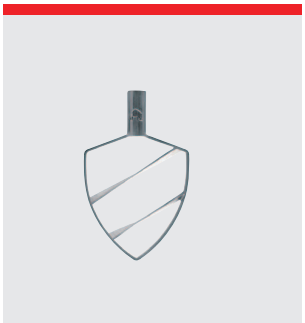

Beater, stainless steel

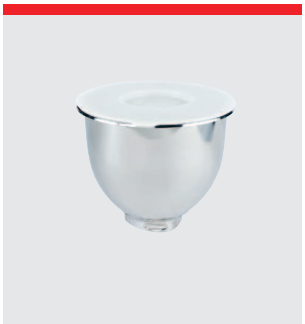

Bowl, stainless steel and lid



Splash guard



Filling chute

VARIMIXER TEDDY 5L

Powder coated
1 bowl 5 liter in stainless steel
1 beater in stainless steel
1 hook in stainless steel
1 whip in stainless steel
1 removable splash guard in plastic
1 filling chute
1 lid for bowl
Voltage: 1 ph, 220-240V, 50-60 Hz. 500 W

VARIMIXER TEDDY 5L TECHNICAL DATA

Volume	5	l
Effect	500	W
Standard voltage*	220-240	V
Net weight	18	kg
H x W x L	400x240x462	mm
Variable speed	78–422	RPM
Phases	1	ph
IP code	IP42	

*Other voltage power supply are available upon request in the range of 100 to 480 V.
All standard and marine mixers are available in 50 and 60 Hz.

CAPACITIES

Egg whites	0.7 l
Whipped cream	1.5 l
Mayonnaise	4.4 l
Herb butter	1.7 kg
Mashed potatoes	2.5 kg
Bread dough (50% AR)	2.5 kg
Bread dough (60% AR)	2.5 kg
Ciabatta dough (70% AR)	3.0 kg
Muffins	2.5 kg
Layer cake base	1.0 kg
Meatball mix	3.0 kg
Icing	2.9 kg
Doughnut (50% AR)	2.5 kg

DIMENSIONS

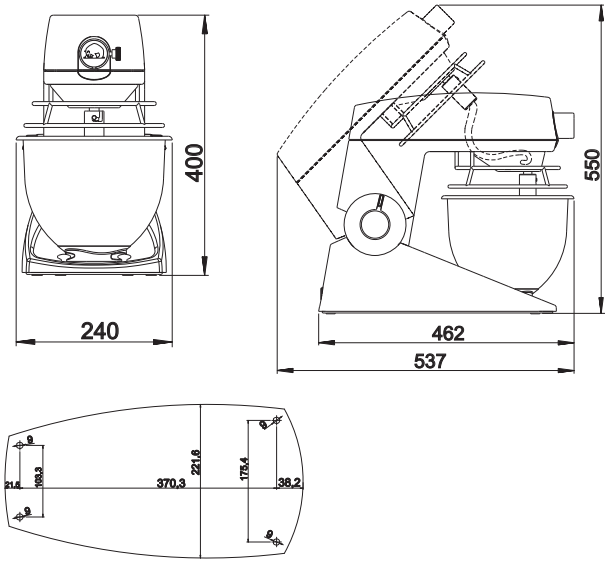

CERTIFICATONS

Varimixer

A/S Wodschow & Co
Kirkebjerg Søpark 6
DK-2605 Brøndby
P: +45 4344 2288
E: info@varimixer.com
www.varimixer.com