XEFR-04HS-ETLV

Project
Item
Quantity
Date

Model
BAKERLUX SHOP.Pro™ TOUCH

Energy efficiency 6.6 kWh/day - 0 kg CO_2/day*

*More details on the last page.

Convection oven	Electric
4 trays 460x330	Hinge on the right side
2.4" Touch control panel	
Automatic opening	
Voltage: 220-240V 1~	



Description

Convection oven, ideal for baking breakfast and snack products, in particular pastry and frozen bakery ones. Humidity setting, 2 programmable fan speeds and 304 stainless steel cooking chamber. The 2,4" touch digital panel allows the storage of 99 programs together with their image and name in order to facilitate work in each sales point. Ready to be connected to the Internet and use the datadrivencooking.com portal.

Standard cooking features

Programs

- **99** Programs

Manual cooking

- **Temperature:** 30 °C – 260 °C
- Up to 9 cooking steps
- Humidity set by 20%

App and web services

- **Data Driven Cooking app & webapp:** check and monitor in real-time the operating conditions of your ovens, create and share new recipes. Artificial intelligence transforms consumption data into useful information and allows you to increase daily profits
- **Top Training app:** download the Unox Top.Training app and learn step by step all the secrets of your new oven's control panel

Advanced and automatic cooking features

Unox Intensive Cooking

- **DRY.Plus:** rapidly extracts humidity from the cooking chamber
- **STEAM.Plus:** creates instant humidity
- **AIR.Plus:** multiple fans with reverse gear and 2 speed settings

Key features

- Cooking chamber in high-resistance AISI 304 stainless steel with rounded edges
- Double glass
- Cooking chamber lighting through LED lights embedded in the door
- Baking chamber with chrome-plated steel rack rails with anti-tip system
- 2-speed fan system and high-performance circular heating elements
- Built-in Wi-Fi internet connection
- **Wi-Fi / USB data:** download/upload HACCP data
- **Wi-Fi / USB data:** download/upload programs

CHEFS DEPOT
Culinary Supplies

XEFR-04HS-ETLV

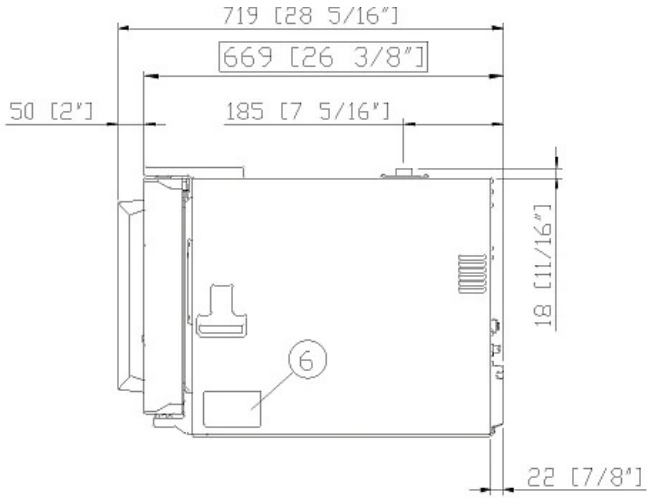

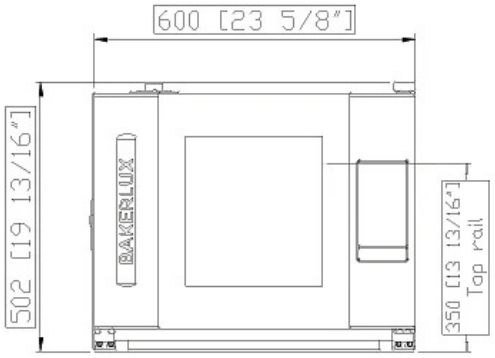

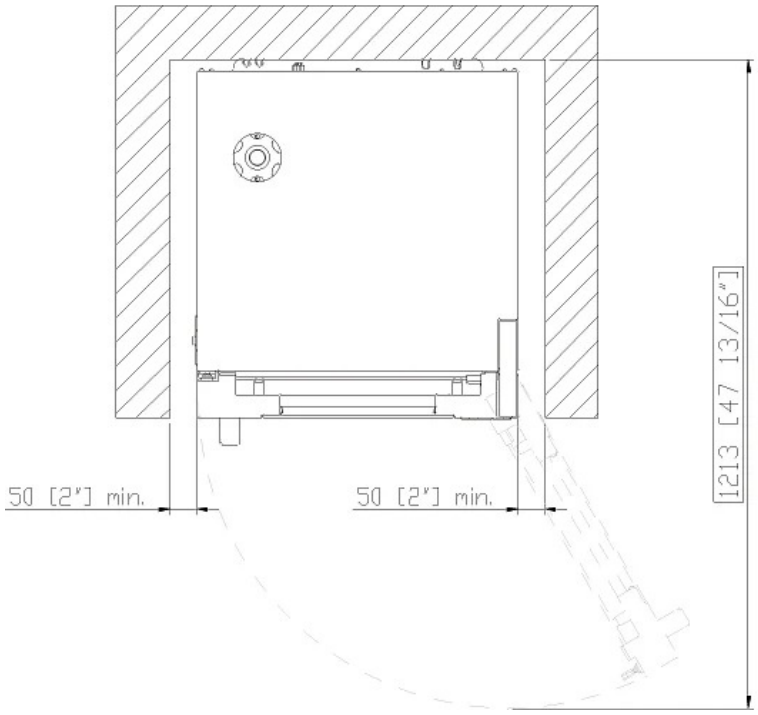

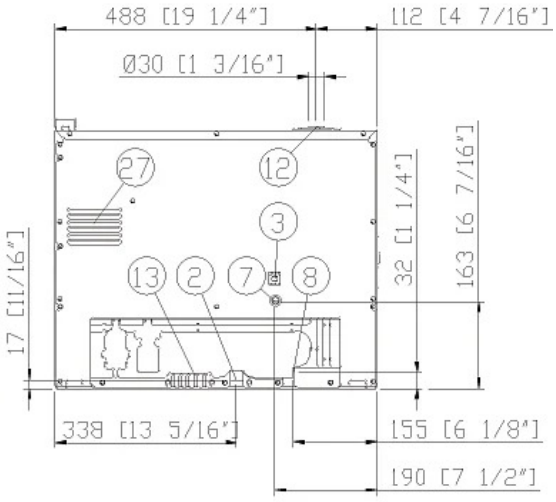

Dimensions and weight

Width	600 mm
Depth	669 mm
Height	502 mm
Net weight	39 kg
Tray pitch	75 mm

Connection positions

2	Terminal board power supply
3	Unipotential terminal
6	Technical data plate
7	Safety thermostat
8	3/4" female NPT water inlet
12	Hot fumes exhaust chimney
13	Accessories connection
27	Cooling air outlet

XEFR-04HS-ETLV

Electrical power supply

STANDARD

Voltage	220-240 V
Phase	~1PH+PE
Frequency	50 / 60 Hz
Total power	3,5 kW
Max Amp draw	15 A
Required breaker size	16 A
Power cable requirements*	3G x 1,5 mm^2
Plug	Schuko

*Recommended size - observe local ordinance.

Energy efficiency

Consumption	
CO_2 emission	

**The estimate includes only direct emissions produced by the oven. Indirect emissions can be reduced to zero by choosing to purchase energy from renewable sources.

Estimate based on daily use of the oven (300 days/year):

6 light loads of roast chickens (loaded at 20%), 1 full load of roast potatoes, 3 full loads cooking with steam 2 hours in an empty oven at 180 °C.

Estimated assuming the following weekly washing programs (42 weeks/year):

1 long wash, 1 medium wash.

Accessories

- **Ventless hood:** steam condensing hood
- **Waterless hood:** filters odours and absorbs latent heat coming out of the cooking chamber without using water
- **LIEVOX:** Proofer equipped with sensors capable to control and intervene automatically on the leavening process
- **Stand:** the multifunctional support ideal for storing trays safely and placing your oven at the perfect height to work
- **Baking Essentials:** special trays
- **SPRAY&Rinse:** Practical spray detergent to manually clean all kinds of oven. It degreases and removes all kind of dirt
- **PURE:** resin-based filtering system that eliminates from the water all substances that contribute to the formation of limescale inside the oven cooking chamber
- **Ethernet:** Connection board to keep the oven connected to Unox and DDC.App
- **XUC152**

Water Supply

USING A WATER SUPPLY THAT DOES NOT MEET UNOX'S MINIMUM WATER QUALITY STANDARDS WILL VOID ANY WARRANTY.
It is the responsibility of the purchaser to ensure that the incoming water supply is compliant with the listed specifications through adequate treatment measures.

Line pressure:	Drinking water inlet: 3/4" NPT*, line pressure: 22 to 87 psi; 1.5 to 6 Bar (29 psi; 2 Bar recommended)

Inflow water specifications

Free chlorine	≤ 0.5 ppm
Chloramine	≤ 0.1 ppm
pH	7 - 8.5
Electrical conductivity	≤ 1000 µS/cm
Total hardness	≤ 8° dH
Chlorides	≤ 25 ppm

To avoid the formation of limescale the incoming water must have total hardness ≤ 8°dH.

Installation requirements

Installations must comply with all local electrical systems, particularly as for minimum wire gauge required for field connection, hydraulic and ventilation supply. Exhaust and fume analysis must be performed in case of gas ovens.

Register to DDC Service to access data and product specifications.
www.ddc.unox.com