XEFR-04EU-ELDV

Project
Item
Quantity
Date

Model
BAKERLUX SHOP.Pro™ LED

Energy efficiency 7.9 kWh/day - 0 kg CO_2/day*

*More details on the last page.

Convection oven	Electric
4 trays 600x400	Drop down opening
Control panel with 7-segment display	
Manual opening	
Voltage: 380-415V 3N~ / 220-240V 3~ / 220-240V 1~	

Description

Convection oven with humidity and 2 programmable fan speeds. Easy-to-use oven, ideal for baking breakfast and snack products, in particular pastry and frozen bakery ones. The digital panel allows the storage of 99 programs with 3 cooking steps plus preheating, 12 of which with immediate access. Rounded stainless steel chamber to facilitate cleaning and ensure maximum hygiene.



Standard cooking features

Manual cooking

- **Temperature:** 30 °C – 260 °C
- Up to 3 cooking steps
- Humidity set by 20%

Programs

- **99** Programs

Advanced and automatic cooking features

Unox Intensive Cooking

- **DRY.Plus:** rapidly extracts humidity from the cooking chamber
- **STEAM.Plus:** creates instant humidity
- **AIR.Plus:** multiple fans with reverse gear and 2 speed settings

Key features

- Baking chamber made of high-resistance AISI 304 stainless steel with rounded edges
- Double glass
- Baking chamber lighting through LED lights embedded in the door
- Baking chamber with chrome-plated steel rack rails
- 2-speed fan system and high-performance circular heating elements

XEFR-04EU-ELDV

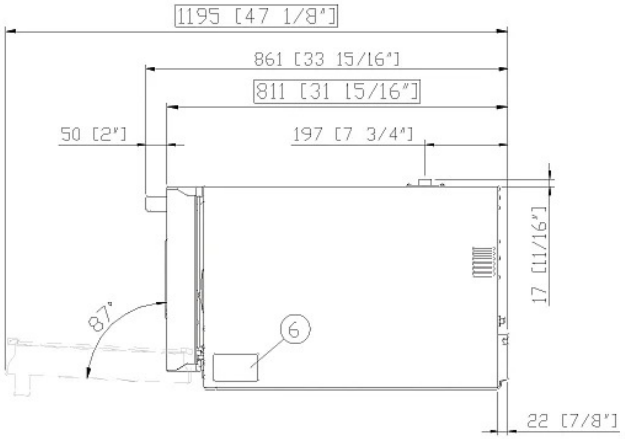

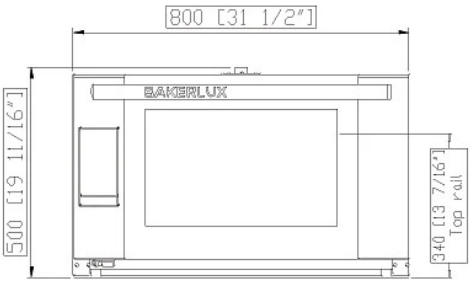

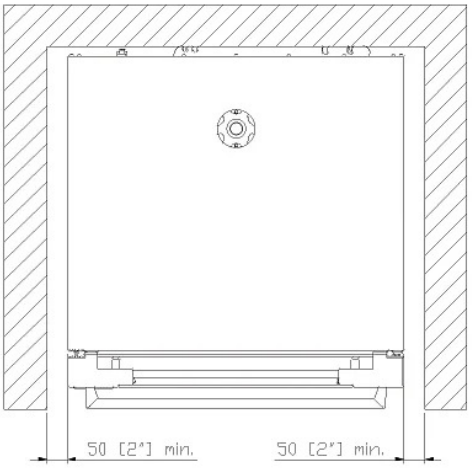

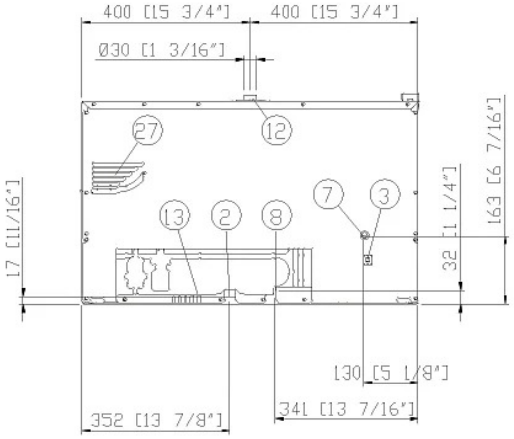

Dimensions and weight

Width	800 mm
Depth	811 mm
Height	500 mm
Net weight	57 kg
Tray pitch	75 mm

Connection positions

2	Terminal board power supply
3	Unipotential terminal
6	Technical data plate
7	Safety thermostat
8	3/4" female NPT water inlet
12	Hot fumes exhaust chimney
13	Accessories connection
27	Cooling air outlet

XEFR-04EU-ELDV

Electrical power supply

STANDARD	
Voltage	380-415 V
Phase	~3PH+N+PE
Frequency	50 / 60 Hz
Total power	6.9 kW
Max Amp draw	14 A
Required breaker size	16 A
Power cable requirements*	5G x 1,5 mm^2
Plug	NOT INCLUDED
OPTION A	
Voltage	220-240 V
Phase	~3PH+PE
Frequency	50 / 60 Hz
Total power	6.9 kW
Max Amp draw	15.5 A
Required breaker size	25 A
Power cable requirements*	4G x 2,5 mm^2
Plug	NOT INCLUDED
OPTION B	
Voltage	220-240 V
Phase	~1PH+PE
Frequency	50 / 60 Hz
Total power	6.9 kW
Max Amp draw	30 A
Required breaker size	32 A
Power cable requirements*	3G x 4 mm^2
Plug	NOT INCLUDED

*Recommended size - observe local ordinance.

Energy efficiency

Consumption

CO_2 emission

**The estimate includes only direct emissions produced by the oven. Indirect emissions can be reduced to zero by choosing to purchase energy from renewable sources.

Estimate based on daily use of the oven (300 days/year):

6 light loads of roast chickens (loaded at 20%), 1 full load of roast potatoes, 3 full loads cooking with steam 2 hours in an empty oven at 180 °C.

Estimated assuming the following weekly washing programs (42 weeks/year):

1 long wash, 1 medium wash.

Register to DDC Service to access data and product specifications.
www.ddc.unox.com

Accessories

- **Ventless hood:** steam condensing hood
- **Waterless hood:** filters odours and absorbs latent heat coming out of the cooking chamber without using water
- **DECKTOP:** traditional baking on stone, convection baking and combi cooking
- **LIEVOX:** Proofer equipped with sensors capable to control and intervene automatically on the leavening process
- **Stand:** the multifunctional support ideal for storing trays safely and placing your oven at the perfect height to work
- **Baking Essentials:** special trays
- **SPRAY&Rinse:** Practical spray detergent to manually clean all kinds of oven. It degreases and removes all kind of dirt
- **PURE:** resin-based filtering system that eliminates from the water all substances that contribute to the formation of limescale inside the oven cooking chamber
- **XUC152**

Water Supply

USING A WATER SUPPLY THAT DOES NOT MEET UNOX'S MINIMUM WATER QUALITY STANDARDS WILL VOID ANY WARRANTY.
It is the responsibility of the purchaser to ensure that the incoming water supply is compliant with the listed specifications through adequate treatment measures.

Line pressure:	Drinking water inlet: 3/4" NPT*, line pressure: 22 to 87 psi; 1.5 to 6 Bar (29 psi; 2 Bar recommended)

Inflow water specifications	
Free chlorine	≤ 0.5 ppm
Chloramine	≤ 0.1 ppm
pH	7 - 8.5
Electrical conductivity	≤ 1000 µS/cm
Total hardness	≤ 8° dH
Chlorides	≤ 25 ppm

To avoid the formation of limescale the incoming water must have total hardness ≤ 8°dH.

Installation requirements

Installations must comply with all local electrical systems, particularly as for minimum wire gauge required for field connection, hydraulic and ventilation supply. Exhaust and fume analysis must be performed in case of gas ovens.