XELA-10EU-EXRS-ET.0

English	Technical data
01 Power	21 kW | 71652 BTU/h
02 Frequency	50 / 60 Hz
03 Electric nominal heat input	19 kW | 64828 BTU/h
06 Power supply cable type	H07RN-F
07 Voltage Power cable section Circuit breaker 220-240V ~3PH+PE 4G x 10 mm^2 63 A I1 54.5 A I2 52 A I3 52.5 A	380-415V ~3PH+N+PE 5G x 4 mm^2 32 A I1 31.5 A I2 31.5 A I3 29 A In 2.5 A
08 Cable | Plug | El. Conn. mode	✓ | X | -
09 RCD / GFCI	F
11 Water pressure	150-1000 kPa | 22-145 psi
12 Water max. consumption (steam)	49 l/h @ 130 kPa | 12.94 gal/h @ 19 psi
13 Cavity dimensions (w x d x h)	716 x 485 x 930 mm 28-3/16" x 19-1/8" x 36-5/8"
14 Max. food load	50 kg | 110 lbs
15 Max. temperature	300 °C | 572 °F
16 IP protection class	X5
17 Data connection	Wifi 2,4 GHz,Wifi 5 GHz
18 Communication protocol	WPA - Personal,WPA 2 - Personal

Terms and conditions of installations - Observe all local specific standard and regulations for installation and operations.

Italiano
01 Potenza
02 Frequenza
03 Potenza termica nominale elettrica
06 Tipo cavo alimentazione
07 Tensione Sezione cavi alimentazione Magnetotermico
08 Cavo | Spina | Modalità connessione elettrica
09 RCD / GFCI
11 Pressione acqua
12 Consumo max acqua (vapore)
13 Dimensioni camera cottura (l x p x h)
14 Max. peso pieno carico
15 Temperatura max.
16 Grado protezione IP
17 Data connection
18 Protocollo di comunicazione

Espanol
01 Potencia
02 Frecuencia
03 Potencia térmica nominal eléctrica
06 Tipo de cable de alimentación
07 Voltaje Sección del cable de alimentación Disyuntor
08 Cable | Enchufe | Modo de conexión eléctrica
09 RCD / GFCI
11 Presión del agua
12 Consumo máximo de agua (vapor)
13 Dimensión de la cavidad (w x d x h)
14 Carga máxima de alimentos
15 Temperatura máxima
16 Grado de protección IP
17 Data connection
18 Protocolo de comunicación

Français
01 Puissance électrique
02 Fréquence
03 Puissance calorifique nominale électrique
06 Type de câble d'alimentation
07 Tension Section câbles d'alimentation Disjoncteur
08 Câble | Prise | Branchement électrique
09 RCD / GFCI
11 Pression de l'eau
12 Consommation max. d'eau (vapeur)
13 Dimension de la cavité (l x p x h)
14 Charge max. des aliments
15 Température max.
16 Niveau de protection IP
17 Data connection
18 Protocole de communication

Deutsch
01 Elektrische Leistung
02 Frequenz
03 Elektrische Nennwärmeleistung
06 Stromkabel Typ
07 Spannung Stromkabel Teil Sicherung
08 Leitung | Stecker | Elektrischer Verbindungsmodus
09 RCD / GFCI
11 Wasserdruck
12 Maximaler Wasserverbrauch bei Damfbetrieb
13 Abmessungen des Hohlraums (B x T x H)
14 Maximale Beladungskapazität
15 Maximale Temperatur
16 IP-Schutzart
17 Data connection
18 Kommunikations-Protokoll

Русский
01 Мощность
02 Частота
03 Номинальная электрическая потребляемая мощность
06 Тип силового кабеля
07 Напряжение Сечение силового кабеля Токовый автомат
08 Кабель | Вилка | вид электрического соединения
09 RCD / GFCI
11 Давление воды
12 Максимальное потребление воды (пар)
13 Габариты камеры (ш x г x в)
14 Максимальная загрузка
15 Максимальная температура
16 Класс защиты IP
17 Data connection
18 Протокол передачи данных

中文
01 功率
02 频率
03 电额定热输入
06 电源电缆类型
07 电压 电源电缆截面 断路器
08 电缆和插头 | 电气连接方式
09 RCD / GFCI
11 水压
12 最大水消耗（蒸汽）
13 腔室尺寸 (宽 x 深 x 高)
14 最大食物负荷
15 最高温度
16 IP保护等级
17 Data connection
18 通讯协议

Português
01 Potência
02 Frequência
03 Potência térmica nominal elétrica
06 Tipo de cabo de alimentação
07 Tensão Seção de cabos de alimentação Disjuntor
08 Cabo | Plugue | Modo de Conexão Elétrica
09 RCD / GFCI
11 Pressão da água
12 Max. consumo de água (vapor)
13 Dimensão de cavidade (c x l x a)
14 Max. capacidade de alimento
15 Max. temperatura
16 Grau de proteção IP
17 Data connection
18 Protocolo de comunicação

CHEFS DEPOT
Culinary Supplies

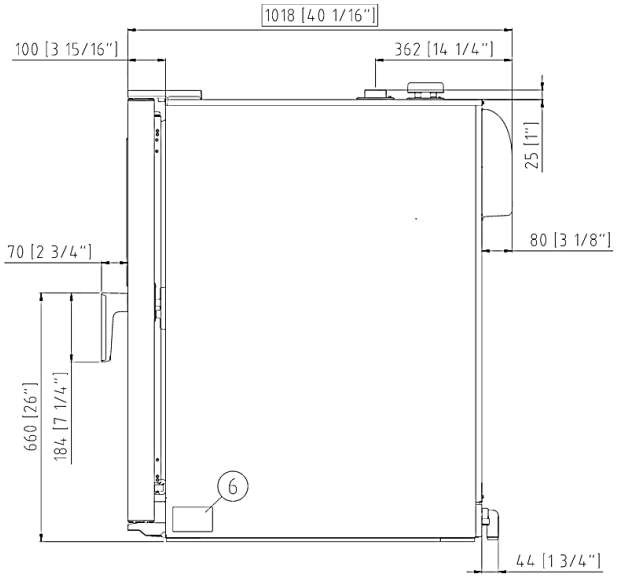
1018 [40 1/16"]
100 [3 15/16"]
362 [14 1/4"]
25 [1"]
80 [3 1/8"]
70 [2 3/4"]
660 [26"]
184 [7 1/4"]
6
44 [1 3/4"]

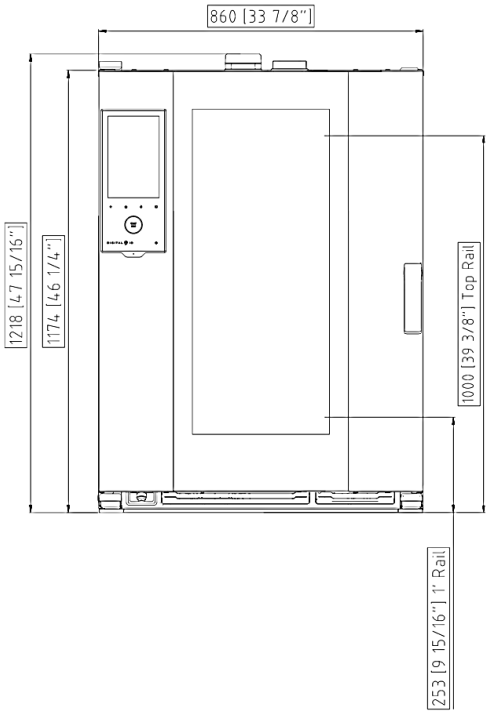
860 [33 7/8"]
1218 [47 15/16"]
1174 [46 1/4"]
1000 [39 3/8"] Top Rail
253 [9 15/16"] 1" Rail

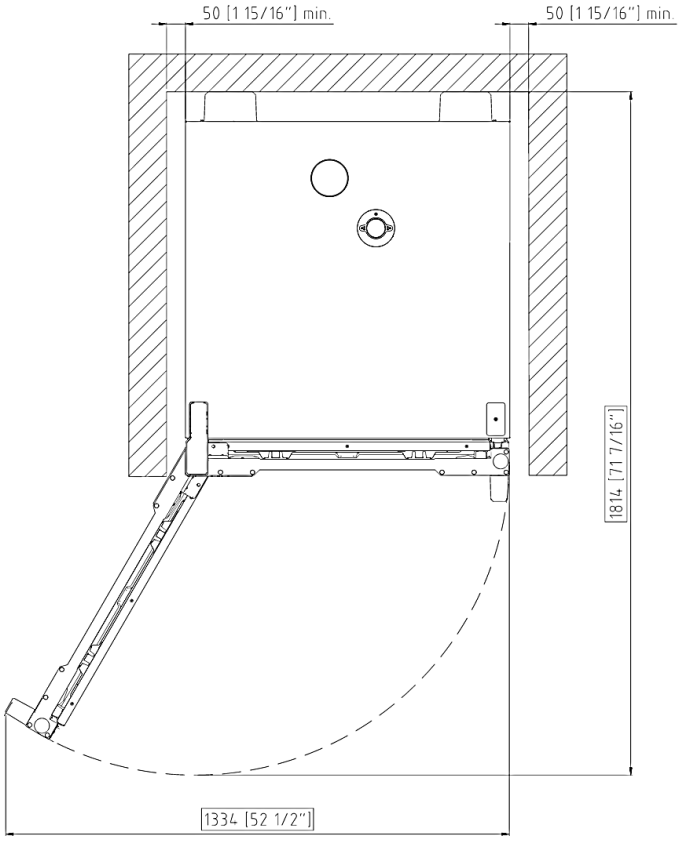
50 [1 15/16"] min.
50 [1 15/16"] min.
1814 [71 7/16"]
1334 [52 1/2"]

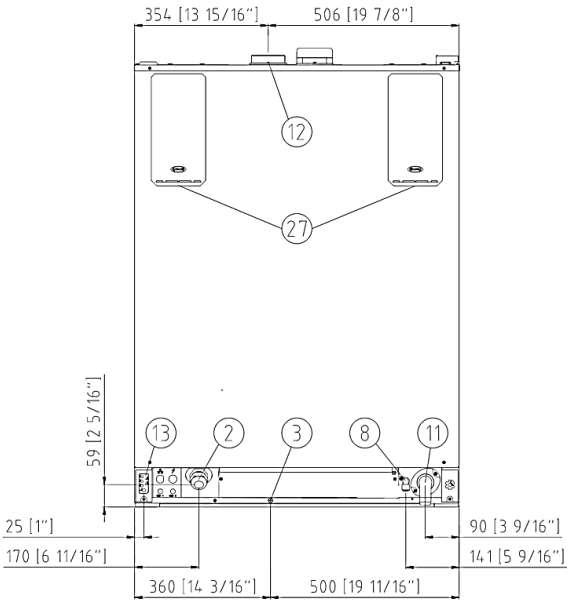
354 [13 15/16"]
506 [19 7/8"]
12
27
59 [2 5/16"]
13
2
3
8
11
25 [1"]
170 [6 11/16"]
90 [3 9/16"]
141 [5 9/16"]
360 [14 3/16"]
500 [19 11/16"]

	English	Italiano	Español	Français	Deutsch
02	Electrical connection	Allacciamento elettrico	Conexión eléctrica	Raccordement électrique	Elektrischer Anschluss
08	Water connection	Allacciamento idrico	Conexión de agua	Raccordement à l'eau	Wasseranschluss
09	Gas connection	Allacciamento gas	Conexión de gas	Raccordement au gaz	Gasanschluss
11	Water drain	Scarico acqua	Desagüe del agua	Evacuation	Abflussrohr
12	Smoke exhaust	Scarico fumi	Salida de humos	Aspiration des fumées	Abluftrohr
13	Accessories connection	Collegamento accessori	Conexión de accesorios	Connexion des accessoires	Anschluss des Zubehörs
30	Combustion fumes	Fumi di combustione	Gases de combustión	Fumées de combustion	Abgasse
31	Air inlet	Ingresso aria	Entrada de aire	Entrée d'air	Lufteinlass

	Русский	中文	Português
02	Электрическое подключение	电源连接	Conexão elétrica
08	Подключение к воде	水连接	Conexão hídrica
09	Подключение к газу	燃气连接	Conexão gás
11	Выход воды	排水	Saída de água
12	Выход газов	排烟	Saída de fumaça
13	Подключение аксессуаров	配件连接	Conexão de acessórios
30	Продукты горения	燃烧烟雾	Fumaça de combustão
31	Воздухозаборник	空气入口	Entrada de ar

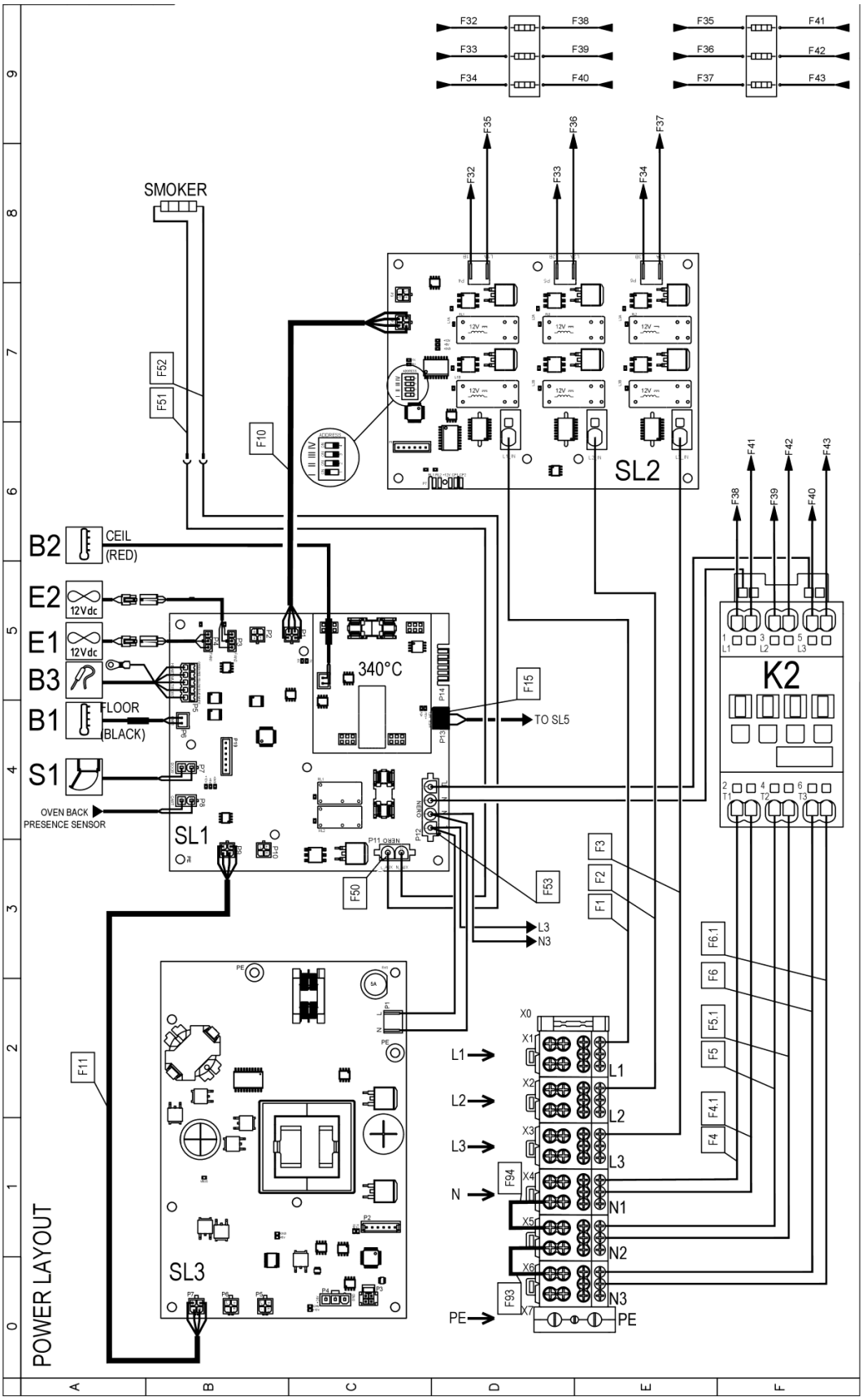
F32
F38
F33
F39
F34
F40
F35
F41
F36
F42
F37
F43
SMOKER
F52
F51
F10
SL2
B2
CEIL
(RED)
E2
12Vdc
E1
12Vdc
B3
B1
FLOOR
(BLACK)
S1
OVEN BACK
PRESENCE SENSOR
SL1
340°C
F15
TO SL5
K2
F50
F53
L3
N3
F3
F2
F1
F6.1
F6
F5.1
F5
F4.1
F4
F11
SL3
X0
X1
X2
X3
X4
X5
X6
X7
L1
L2
L3
N
PE
F94
F93
N1
N2
N3
POWER LAYOUT

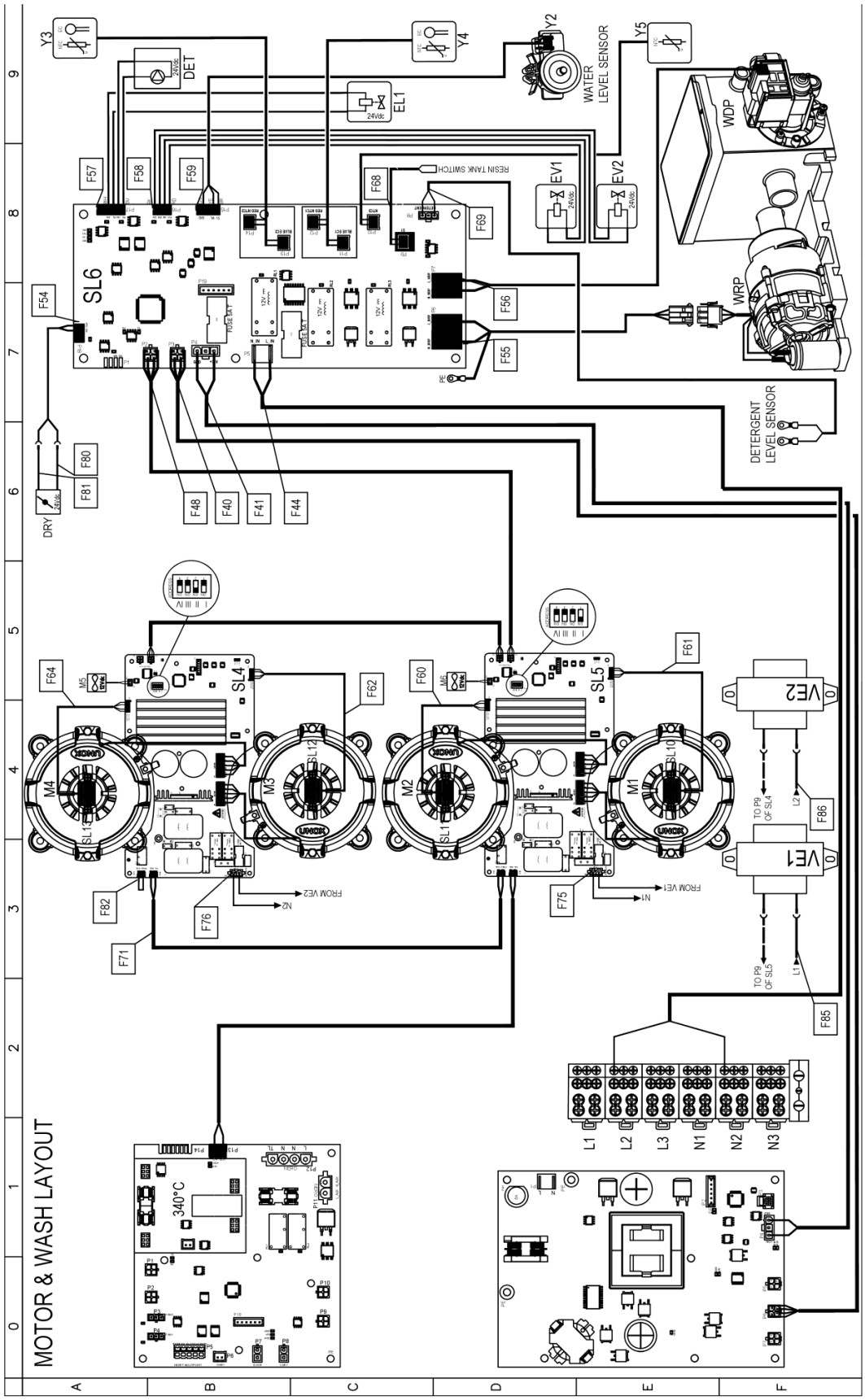
MOTOR & WASH LAYOUT
Y3
Y4
Y2
Y5
WATER LEVEL SENSOR
DET
EL1
WDP
WRP
EV1
EV2
RESIN TANK SWITCH
SL6
F54
F55
F56
F57
F58
F59
F68
F69
DETERGENT LEVEL SENSOR
DRY
F80
F81
F48
F40
F41
F44
SL4
SL5
F64
F60
F61
F62
M1
M2
M3
M4
SL10
SL11
SL12
VE1
VE2
F86
F85
F82
F76
F71
F75
FROM VE2
FROM VE1
TO P9 OF SL4
TO P9 OF SL5
L1
L2
L3
N1
N2
N3
340°C

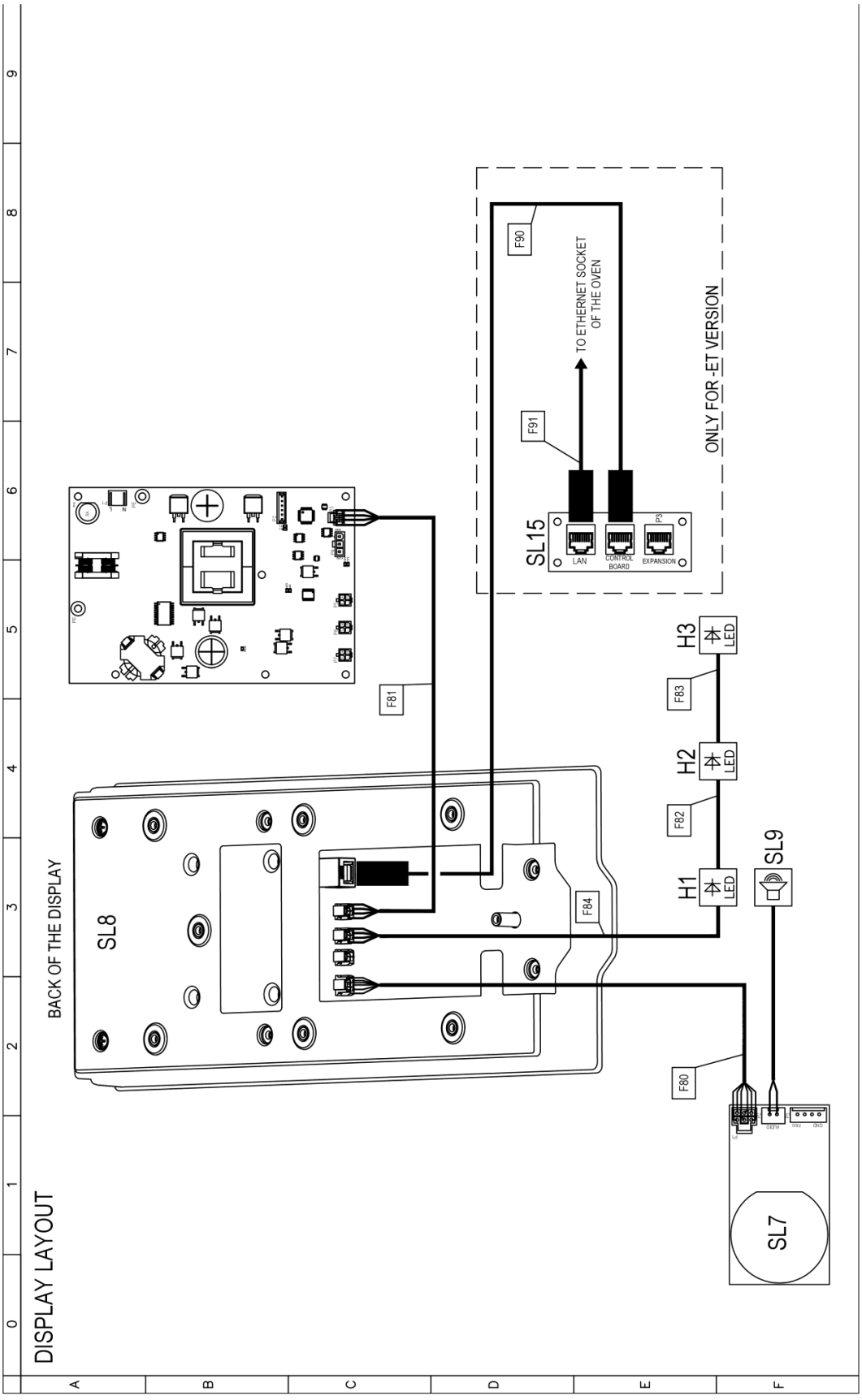
DISPLAY LAYOUT
BACK OF THE DISPLAY
SL8
SL7
SL9
SL15
LAN
CONTROL BOARD
EXPANSION
TO ETHERNET SOCKET OF THE OVEN
ONLY FOR -ET VERSION
F80
F81
F82
F83
F84
F90
F91
H1
H2
H3
LED

Sigle	ITALIANO	ENGLISH	FRANCAIS	ESPAÑOL	DEUTSCH
K2	TELERUTTORE	CONTACTOR	TELERUPTEUR	TELERRUPTOR	RELAIS
SL1	SCHEDA POTENZA	POWER CARD	CARTE DE PUISSANCE	TARJETA POTENCIA	POWERPLATINE
SL2	SCHEDA POTENZA	POWER CARD	CARTE DE PUISSANCE	TARJETA POTENCIA	POWERPLATINE
SL3	SCHEDA POTENZA	POWER CARD	CARTE DE PUISSANCE	TARJETA POTENCIA	POWERPLATINE
SL15	BRIDGE ETHERNET	BRIDGE ETHERNET	BRIDGE ETHERNET	BRIDGE ETHERNET	BRIDGE ETHERNET
X0	BLOCCHETTO TERMINALE	TERMINAL BLOCK	BLOC TERMINAL	BLOQUE TERMINAL	TERMINAL BLOCK
X1,X2,X3,X4,X5,X6	MORSETTIERA	TERMINAL BLOCK	BORNIER	CONECTOR	KLEMMLEISTE
X7	MORSETTIERA	TERMINAL BLOCK	BORNIER	CONECTOR	KLEMMLEISTE
DET	POMPA 24Vdc	PUMP 24Vdc	POMPE 24Vdc	BOMBA 24Vdc	PUMPE 24Vdc
DRY	DRY MAXY 24Vdc	DRY MAXY 24Vdc	DRY MAXY 24Vdc	DRY MAXY 24Vdc	DRY MAXY 24Vdc
EL1,EV1,EV2	ELETTROVALVOLA ACQUA 24Vdc	WATER SOLENOID VALVE 24Vdc	ELECTROVANNE EAU 24Vdc	ELECTROVALVULA 24Vdc	ELEKTROVENTIL 24Vdc
SL6	SCHEDA POTENZA	POWER CARD	CARTE DE PUISSANCE	TARJETA POTENCIA	POWERPLATINE
Y3,Y4	SONDA CONDUCIMETRO	CONDUCTIVITY PROBE	SONDE DE CONDUCTIVITÉ	SONDA DE CONDUCTIVIDAD	LEITFÄHIGKEITSSONDE
Y5	SONDA TEMPERATURA	TEMPERATURE PROBE	SONDE DE TEMPERATURE	SONDA TEMPERATURA	TEMPERATURFÜHLER
B1,B2	SONDA CAMERA	TEMPERATURE PROBE	SONDE DE CHAMBRE	SONDA CAMARA	GARRAUMTEMPERATURFUHLER
B3	SONDA AL CUORE	CORE PROBE	SONDE A COEUR	SONDA CORAZON	KERNTEMPERATURFUHLER
E1,E2	VENTOLA RAFFREDDAMENTO 12V	COOLING FAN 12V	TURBINE DE REFROIDISSEMENT 12V	TURBINA DE REFRIGERACION 12V	LÜFTER 12V
H1,H2,H3	LUCE CAMERA	OVEN LIGHT	ECLAIRAGE DE CHAMBRE	LUZ CAMARA	BELEUCHTUNG
M1,M2,M3,M4	MOTORE	MOTOR	MOTEUR	MOTOR	MOTOR
M5,M6	VENTOLA RAFFREDDAMENTO 12V	COOLING FAN 12V	TURBINE DE REFROIDISSEMENT 12V	TURBINA DE REFRIGERACION 12V	LÜFTER 12V
S1	MICRO INTERRUTTORE PORTA	DOOR MICROSWITCH	MICROINTERRUPTEUR DE PORTE	MICROINTERRUPTOR PUERTA	TURKONTAKTSCHALTER
SL4,SL5	SCHEDA POTENZA	POWER CARD	CARTE DE PUISSANCE	TARJETA POTENCIA	POWERPLATINE
SL7	SCHEDA POTENZA	POWER CARD	CARTE DE PUISSANCE	TARJETA POTENCIA	POWERPLATINE
SL8	SCHEDA CONTROLLO	CONTROL BOARD	CARTE DE CONTROLE	TARJETA DE CONTROL	KONTROLL PLATINE
SL9	ALTOPARLANTE	SPEAKER	CONFERENCIER	ALTAVOZ	LAUTSPRECHER
SL10,SL11,SL12,SL13	SENSORE VELOCITA MOTORE	MOTOR SPEED SENSOR	CAPTEUR DE VITESSE MOTEUR	SENSOR DE VELOCIDAD MOTOR	GESCHWINDIGKEITSSENSOR
VE1,VE2	REATTORE DI LINEA	LINE REACTOR	RÉACTEUR DE LIGNE	REACTOR DE LINEA	LEITUNGSREAKTOR
WDP,WRP	POMPA	PUMP	POMPE	BOMBA	PUMPE
Y2	SENSORE LIVELLO	WATER LEVEL	CAPTEUR DE NIVEAU	SENSORE DE NIVEL	FÜLLSTANDSSENSOR

ED1509A
POWER SUPPLY - CONNECTION DIAGRAM

380 - 415V ~ 3PH + N + PE 50/60Hz

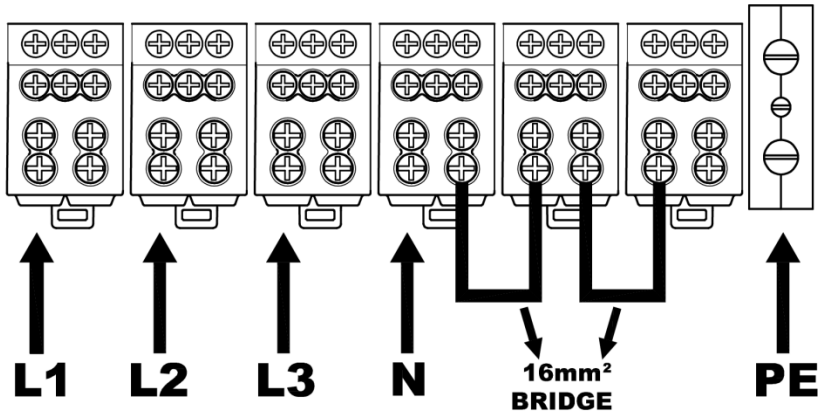

220-240V ~ 3PH + PE 50/60Hz

