Induction Griddles

Technical Specifications EG7-4P, EG7-8P, EG7-12P



EG7-12P

Induction Griddles
- High quality 21mm thick mild steel plate
- Rapid induction high-frequency coil technology
- Plate heats up from ambient to 200°C in 5 minutes
- Variable heat settings with LED power display
- 6 programmable temperature/timer settings
- Dual control 2 x 600mm sections (1200 model only)
- Thermostatic temp control regulates heat for consistency
- Evenly dispersed heating across entire cooking surface
- AISI grade stainless used on all external panels
- High quality engineering and craftsmanship throughout
- Integrated closed base with grease/waste sliding tray

Connections
- Electric - hard wired or fit cable and plug (not supplied)

Options/Accessories
- Hard chrome (polished) plate finshed surface
- Ribbed plate section (1/3 LHS on 800 and 1200 models)

INDUCTION

- Suitable for grilling all types of meats and vegetables
- Induction tech allows rapid heating and quick recovery
- Fast and powerful with instant heat transfer to griddle plate
- Digital thermostatic control (proximate) regulates temp
- User friendly touch control operation with timer functions
- Large usable surface area with even heat distribution
- Lower ambient heat for a more comfortable kitchen
- 90%+ thermal efficiency results in lower energy costs
- Safer than gas with zero carbon emissions or combustion
- Durable, versatile, and easy to clean and service
- 2* Year Parts and Labour 'Platinum Warranty'

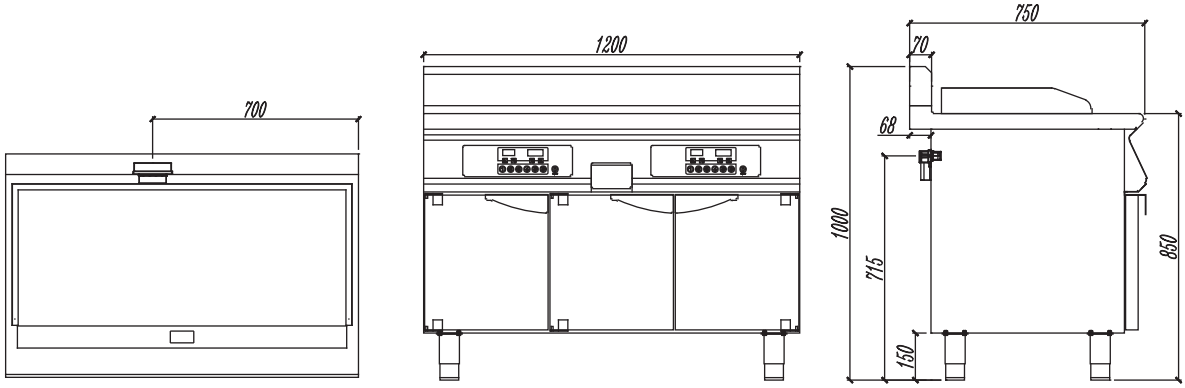

Model	Description	Dimensions	Power
EG7-4P	400mm wide Induction Griddle	400w x 750d x 1000h	5kW, 20.8A, 1PH, 240V
EG7-8P	800mm wide Induction Griddle	800w x 750d x 1000h	8kW, 11.1A, 3PH, 50Hz
EG7-12P	1200mm wide Induction Griddle	1200w x 750d x 1000h	16kW, 22.3A, 3PH, 50Hz

2* YEAR PLATINUM WARRANTY
1 YEAR INCLUDED. 1 YEAR EXTENDABLE UPON REGISTRATION

Luus Industries Pty Ltd | (03) 9240 6822 | sales@luus.com.au | www.luus.com.au