ELECTRIC GRIDDLE PAN 1 SUPRA COUNTER SL
MODEL NO: 1222507

Product Advantages:

- Temperature control by precision thermostats with control lamp.
- Easy to clean.
- Griddle plate, finely ground, with PowerBlock sandwich frying plate bottom.
- Wired completely internally.
- Connection, sealing by means of patented connecting method.
- Feet are adjustable in height.
- Aluminium plate for even heat distribution with accurately fitting machined slots.
- Tubular elements are individually screwed to simplify service.

Installation requirements:

- Electrical supply provided by customer.

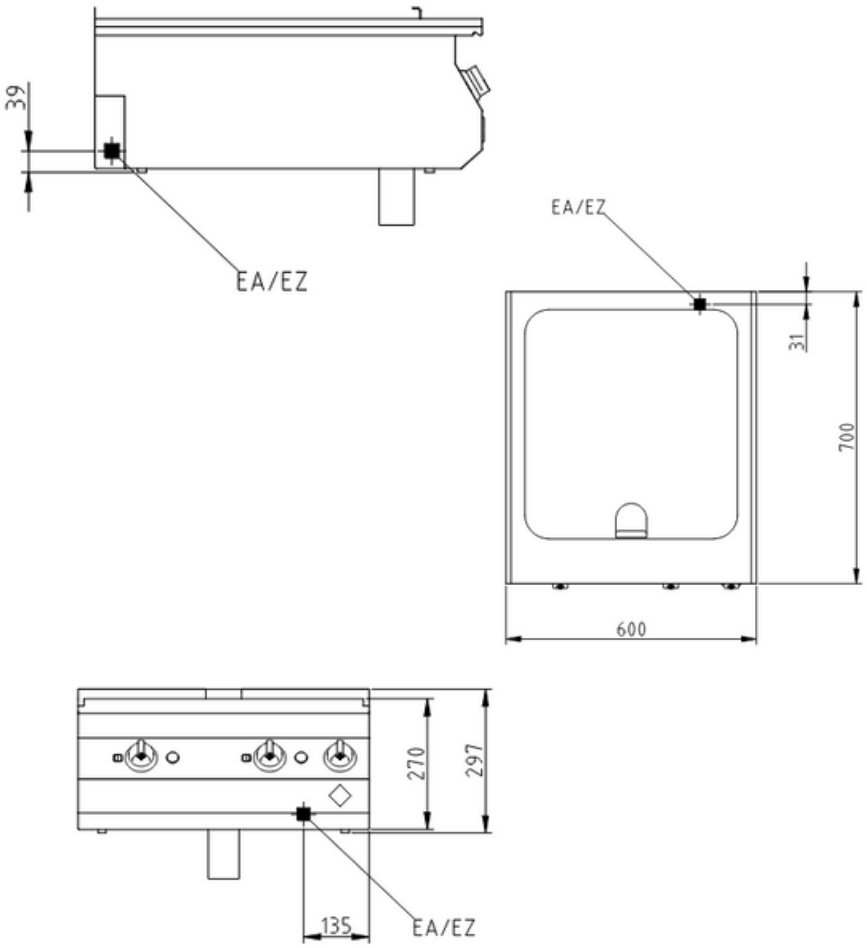



Technical Data:	
Width x Height x Depth (mm)	600 x 270 x 700 mm
Effective area	1
Dim.: effect. Area (mm)	500 x 540 x 100
Connected load (electrical)	7.2
(kW): Voltage (V) / EC:	415 3 phase
Recommended fuses (A):	3 x 32
Frequency range (Hz):	50/60
Net weight (kg):	50
Gross weight (kg):	59
Heat emission latent (W):	2880
Heat emission sensitive (W):	3240
Type of protection:	IPX4

phoeniks.com.au
P- 1300 405 404
E- contact@phoeniks.com.au