SILO

S220

Ice Bin for Modular Ice Machines

Features



- 230kg ice storage capacity
- Strong solid AISI 304 stainless steel box-type frame
- Very hard sanitary polythylene vat, resistant to blows and scratches
- Easy cleaning design: seamless one-piece vat with rounded corners, avoiding possible dirty points and facilitating cleaning
- Drainage system that collects and drives the water to the drain keeping the bin clean and dry

Machine Specifications

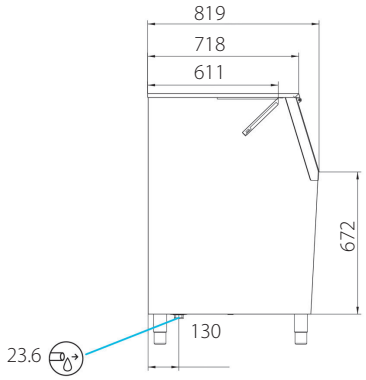

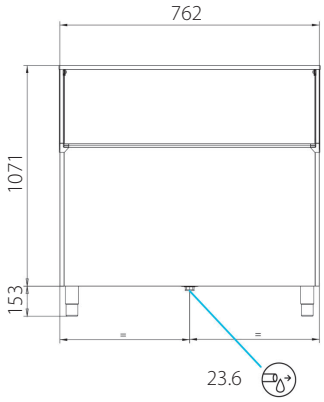

Machine dimensions	762 x 819 x 1071mm
Packed dimensions	850 x 890 x 1210mm
Weight	56kg
Floor area	0.92m^2
Storage bin capaity	230kg

Supplied Accessories


Water Inlet Hose


Drain Hose


Drainage Elbow


Large Scoop


4 Height Adjustable Leg Kit

Water Filter

A Watermark approved* water filter, suitable for the water type at the place of installation must be used. SKOPE can provide a water filter that protects the Ice Maker, and ensures proper function and high quality ice production. Service or repair due to absence of a suitable water filter will not be covered by SKOPE warranty. Contact SKOPE for more information.

*Watermark approval is only applicable to Australian installations. Elsewhere, a suitable water filter must be used