CHEFS DEPOT
Culinary Supplies

CARPIGIANI



Super Tre AV
EVO P SP

Twin twist floor standing machine.
Perfect for customers looking for a high performance machine.
Flavour the Evolution



Performance and Quality
- **Pump feed** it is possible to obtain 40-80% overrun. Easy to adjust even when the tank is full!
- **Hard-O-Tronic®** electronic control system to choose the consistency of the soft serve in a simple manner and change it for a variety of styles of your choosing

Operations
- **The Self-Pasteurization system** allows the wash cycle to be done up to a maximum 42-day interval

Smart tools
- User-Friendly **LCD Control panel**
- Remote assistance with **Teorema** Connectivity
- **QR code** ensures updated access to the latest machine information

TEOREMA* | QR CODE | Carpi Care kit | Carpi Clean kit**

*optional **request them from your dealer to always keep your machine hygienically perfect.

carpigiani.com

Super Tre AV EVO P SP

CARPIGIANI

www.bipluci.it | printed 03/2023

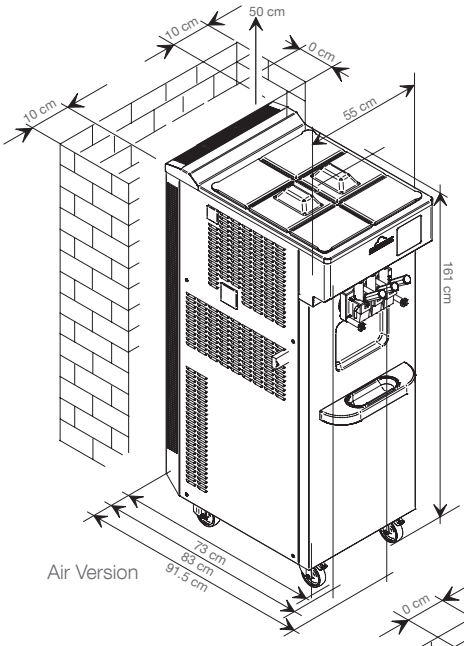

Air Version

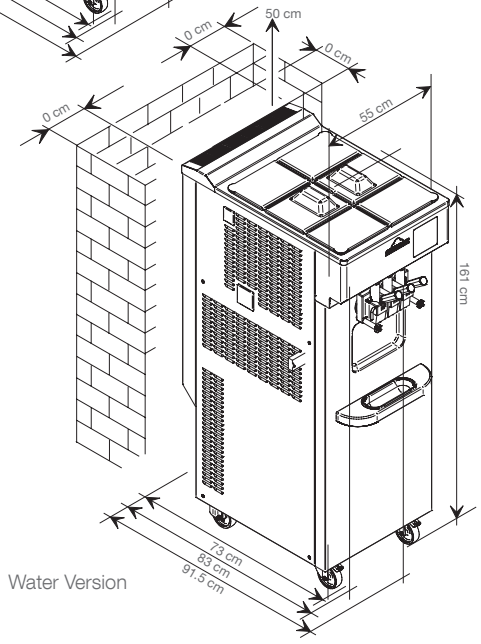

Water Version

Standard configurations

- Pump
- 3X Beater
- Stainless **Steel front panel**
- **Air-cooled**
- **Self-pasteurization**

Optional configurations

- **Star Door**
- **Nozzle**
- **Self Closing**
- **Water Cooled machine**
- **Teorema**

	Flavours	Mix Delivery System	Hourly production	Tank Capacity	Cylinder Capacity	Rated Power Input	Fuse Size	Power Supply	Cooling System	Refrige-rant	Net Weight
			(75gr portions)	*lt*	*lt*	*kW*	*A*				*kg*
Super Tre AV EVO P SP	2+1	Pump	650*	11+11	1.75	5	16	400/50/3**	Air, water optional	R452***	280

* production capacity depends on the mix used and the room temperature ** other voltages and cycles available upon request *** alternative solutions available

Super Tre AV EVO P SP is produced by Carpigiani with Quality System UNI EN ISO 9001.

All specifications mentioned must be considered approximate; Carpigiani reserves the right to modify, without notice, all parts deemed necessary.

CARPIGIANI

carpigiani.com

CARPIGIANI services · CARPIGIANI SOFT SERVE AND SHAKE CONSULTING · GELATO MUSEUM

Via Emilia, 45 - 40011 Anzola dell'Emilia - BOLOGNA, Italy - T. +39 051 6505111 - info@carpigiani.it

an Ali Group Company

ALI GROUP

The Spirit of Excellence

Super Tre AV EVO P SP

3X Beater CARPIGIANI

Ordinary Maintenance Schedule

	6 MONTHS	12 MONTHS	WHY IS IT NEEDED?
SUPPLIED WITH THE MACHINE		**Carpi Care kit**	Kit of consumable parts to keep your machine's hygiene level at the top.
		Carpi Clean kit	Set of brushes of the correct size to thoroughly clean every component of the machine.
MANDATORY		**Carpi Care kit**	Kit of consumable parts to keep your machine's hygiene level at the top. It avoids machine downtime by keeping accessible parts that can be lost or damaged during cleaning procedures handy. 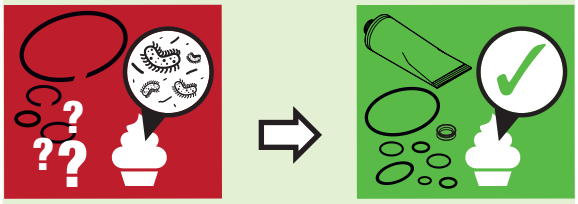
		1 1	
RECOMMENDED		**Brushes kit**	Set of brushes of the correct size to thoroughly clean every component of the machine. Replacement is necessary to ensure the best cleaning and hygiene. 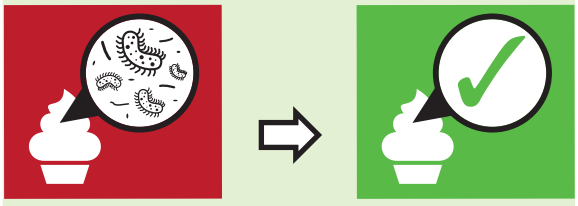
		1 1	

Carpigiani recommends a preventive maintenance visit by Carpigiani approved service providers at least once a year.

Super Tre AV EVO P SP

3X Beater CARPIGIANI

Ordinary Maintenance Schedule

MANDATORY

	6 MONTHS	12 MONTHS	WHY IS IT NEEDED?
			
3X Beater Scrapers	2	2	Kit of scrapers to ensure the best cooling efficiency and quality of the product. Worn scrapers increase product dispensing time and recovery time. ~ 130 sec. → RECOVERY TIME** → ~ 25 sec.
			
Pusher Beater End	-	2	Terminal part of the beater that maintains the alignment of the beater ensuring the correct functioning of the scrapers. ~ 130 sec. → RECOVERY TIME** → ~ 25 sec.
			
Set Gears	-	1 + 1*	Set of gears to keep the pump performing at its best. If the gears are worn out, the overrun will decrease and therefore the earnings on each cup. <20% → OVERRUN ** → ≥50%

Carpigiani recommends a preventive maintenance visit by Carpigiani approved service providers at least once a year. *1 year or 75.000 + 75.000 cones dispensed. For correct procedure, scan QR Code on your machine. **Reported values depend on the mix used and the room temperature.