TOP MOUNT SOLID DOOR

DUAL TEMP

MODEL : KRF25-2

FEATURES / BENEFITS

- **DIGITAL TEMPERATURE CONTROL SYSTEM**
  Provides precise and constant temperature. This level of precision allows food products to remain fresh over an extended period of time.
- **HIGH-TECH MONITOR**
  The monitor digitally displays present cabinet temperatures. You can easily change the temperature by adjusting the thermostat.
- **HOT GAS CONDENSATE SYSTEM**
  Through Turbo Air's creative innovation, the condensate system surfaces have been specially treated to resist corrosion. This not only increases efficiency without the risk of refrigerant leakage from corrosion, but also prevents the overflow of condensate water.
- **EFFICIENT REFRIGERATION SYSTEM**
  Turbo Air's solid door reach-in's are designed with oversized and balanced refrigeration systems. CFC Free R-134A utilized for refrigerator and R-404A for freezer. These include efficient evaporators and condensers for faster cooling and greater efficiency.
- **AUTOMATIC EVAPORATOR FAN MOTOR DELAYS**
  Through stopping the evaporator fan when the refrigerator door opens, the circulation of hot, moist air into the refrigerator is prevented. This increases energy efficiency and lengthens the life of the compressor.
- **ADJUSTABLE, HEAVY DUTY, PE(POLYETHYLENE) COATED WIRE SHELVES**
- **EXTERIOR & INTERIOR OF CABINET CONSTRUCTION**
  Stainless steel exterior (galvanized steel top, bottom and back) and stainless steel interior with AL inside walls and door liners. It guarantees the utmost in cleanliness and long product life. Unlike other companies' products, the sharp corners and edges have been rounded to reduce the risk of injury.
- **HIGH-DENSITY POLYURETHANE INSULATION**
  The entire cabinet structure and solid doors are foamed-in-place using high density, CFC free polyurethane insulation.
- **ERGONOMICALLY DESIGNED DOORS**
  Customers' fatigue fades away with easy grip handles and doors that open effortlessly. These features along with self-closing doors make this the ultimate choice in customer convenience.



Model	Swing Door	Capacity (litres)	#of Shelves	HP	AMPS	Crated Weight (kg)	W x D x H (mm)
KRF25-2	2	R 242 F 222	R 1 F 1	1/3	3.5	85	640 x 800 x 1926

TOP MOUNT SOLID DOOR

DUAL TEMP

MODEL : KRF25-2

Model : KRF25-2

SPEC SHEET	KRF25-2	
Classification	Refrigerator / Freezer	
Cabinet dimension (WxDxH mm)	640x800x1926	
Capacity (Liters)	242	222
Inner Temperature	1°c ~ 8°c	-21°c ~ -12°c
Ambient Temperature	38°c	
Doors	2	
# of shelves	1	1
Refrigerant	R-134a	
Compressor (HP)	1/3	
Cooling Type	Fan cooling type	
Insulation Type	Polyurethane/ Cyclopentane+CFC Free	
Temperature Control Type	Digital	
Amps (A)	3.5	
Voltage (V/Hz/Ph)	240V 50Hz 1Ph	
Power (W)	366	
Weight (Kg)	85	

Design and specifications subject to change without notice.
Actual shipping weight may differ due to extra packing materials for product protection.

- DOOR LOCKS STANDARD
- INTERIOR LED LIGHTING STANDARAD
- SELF-CONTAINED SYSTEM
- STANDARD 3" SWIVEL CASTERS WITH LOCKS ON THE FRONT SET
- SOLID AND STURDY GRILLE DESIGN

WARRANTY 2 YEARS PARTS & LABOUR

NATIONWIDE 24/7 SERVICE 365 DAYS

PLAN VIEW

(unit : mm)

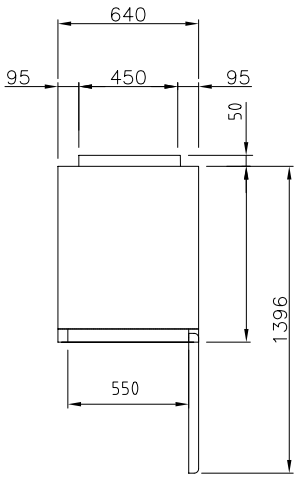

TOP VIEW

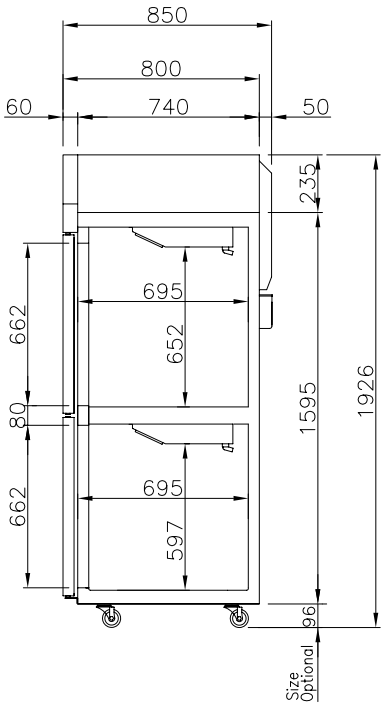

SIDE VIEW

AUSTRALIA BRANCH

TURBO AIR PTY LTD
www.turboairinc.com.au
Ground floor, Building E
10 Highgate St, Auburn
NSW 2144 Australia
T. 02 9737 9881