CHEFS DEPOT
Culinary Supplies

POLAR

Cabinet Refrigerators/ Freezers

Instruction manual



Model:

G590-A/G591-A/GD879-A/GD880-A

Safety Instructions

- Position on a flat, stable surface.
- A service agent/qualified technician should carry out installation and any repairs if required. Do not remove any components or service panels on this product.
  - In Queensland the service agent/qualified technician MUST hold a Gas Work Authorisation or License for hydrocarbon refrigerants if the appliance gas system is being opened or charged.
- Consult Local and National Standards to comply with the following:
  - Health and Safety at Work Legislation
  - Fire Precautions
  - Wiring Regulations
  - Building Regulations
- DO NOT use jet/pressure washers to clean the appliance.
- DO NOT use the appliance outside.
- DO NOT use this appliance to store medical supplies.
- DO NOT stand or support yourself on the base, drawers or doors.
- DO NOT allow oil or fat to come into contact with the plastic components or door seal. Clean immediately if contact occurs.
- Bottles that contain a high percentage of alcohol must be sealed and placed vertically in the refrigerator.
- Always carry, store and handle the appliance in a vertical position and move by holding the base of the appliance.
- Always switch off and disconnect the power supply to the unit before cleaning.
- Keep all packaging away from children. Dispose of the packaging in accordance with the regulations of local authorities.
- If the power cord is damaged, it must be replaced by a POLAR agent or a recommended qualified technician in order to avoid a hazard.

POLAR

G590-A_G591-A_GD879-A_GD880-A_A5_v4_20240315.indb 2 2024/3/15 17:47

Caution: Risk of Fire



- Do not store explosive substances such as aerosol cans with a flammable propellant in this appliance.

Warning: Keep all ventilation openings clear of obstruction. Unit should not be boxed in without adequate ventilation.

- **To comply with AS/NZS 60079.10.1:2009: Ensure there are not sources of ignition in any area where refrigerant could gather in the event of a leak.**
- **Electrical equipment should not be placed under the vent or where refrigerant could gather in the event of a leak.**
- **Warning:** Do not use mechanical devices or other means to accelerate the defrosting process, other than those recommended by the manufacturer.
- **Warning:** Do not damage the refrigerant circuit.
- **Warning:** Do not use electrical appliances inside the food storage compartments of the appliance.

Product Description

G590-A - 440 litre Single Door Stainless Steel Refrigerator
G591-A - 440 litre Single Door Stainless Steel Freezer
GD879-A - 960 litre Double Door Stainless Steel Refrigerator
GD880-A - 960 litre Double Door Stainless Steel Freezer

Introduction

Please take a few moments to carefully read through this manual. Correct maintenance and operation of this machine will provide the best possible performance from your POLAR product.

Pack Contents

The following is included:

- POLAR Refrigerator or Freezer
- Keys x 2
- Shelf guides x 6 (Single) / x 12 (Double)
- Floor guards (1 per door)
- Shelves
  G590-A/G591-A x 3
  G879-A/G880-A x 6
- Instruction manual

POLAR prides itself on quality and service, ensuring that at the time of packaging the contents are supplied fully functional and free of damage.

Should you find any damage as a result of transit, please contact your POLAR dealer immediately.

G590-A_G591-A_GD879-A_GD880-A_A5_v4_20240315.indb 3 2024/3/15 17:47

Installation

Note: Not for use in vans or trailers, food trucks or similar vehicles.
Note: If the unit has not been stored or moved in an upright position, let it stand upright for approximately 12 hours before operation. If in doubt allow to stand.

1. Remove the appliance from the packaging. Make sure that all protective plastic film and coatings are thoroughly removed from all surfaces.
2. To optimize performance and longevity, ensure a minimum clearance of 2.5cm is maintained between the unit and walls and other objects, with a minimum 20cm clearance on the top. **NEVER LOCATE NEXT TO A HEAT SOURCE.**

Note: Before using the appliance for the first time, clean the shelves and interior with soapy water then dry well.

3. Set the brakes on the castors to keep the appliance in position.

Reversing the door

Depending on the location of the appliance, it may be necessary to change the direction the door opens by changing the side of the door handle.

To reverse the door handle:

1. The door handle is on the left side. Disassemble the right lower hinge and left lower hinge.

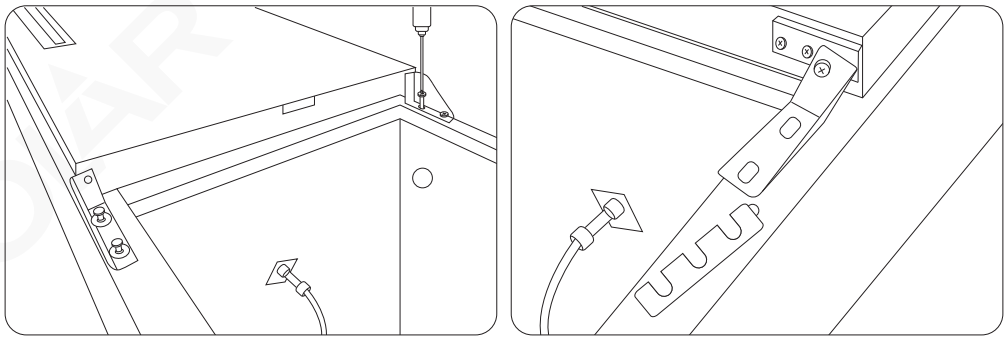

2. Use the spare hinge provided and secure it on the L/H side.

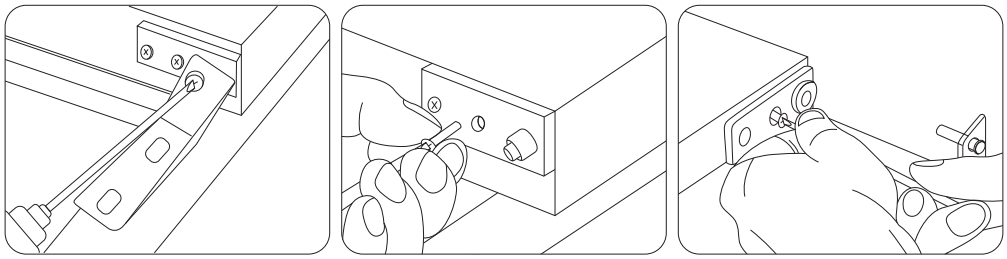

G590-A_G591-A_GD879-A_GD880-A_A5_v4_20240315.indb 4 2024/3/15 17:47

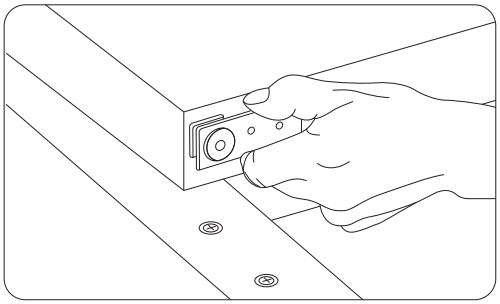

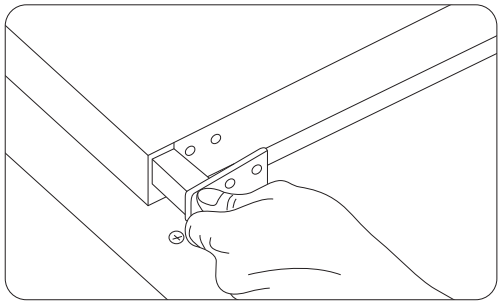

3. Disassemble the upper hinge then install it on the left side.

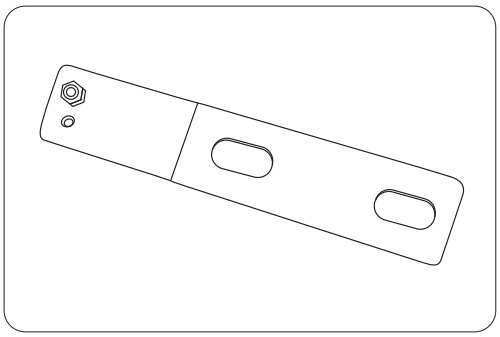

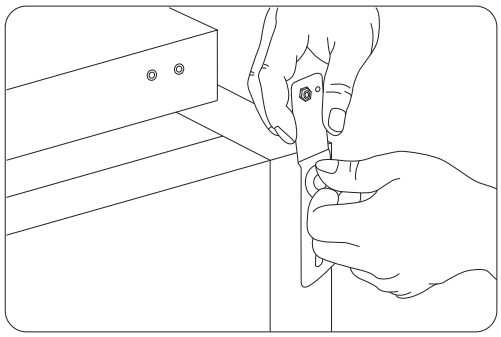

4. Reverse the door and install the left upper hinge.

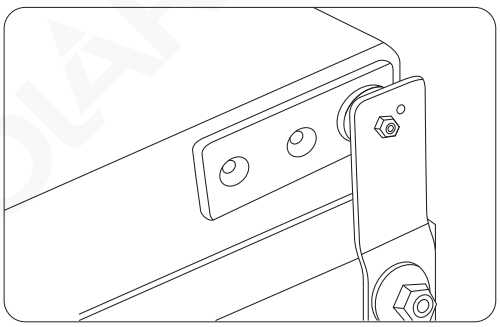

5. Install the left lower hinge.

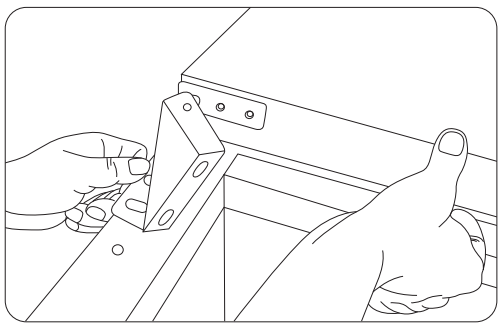

6. Now the door handle is installed on the right side.

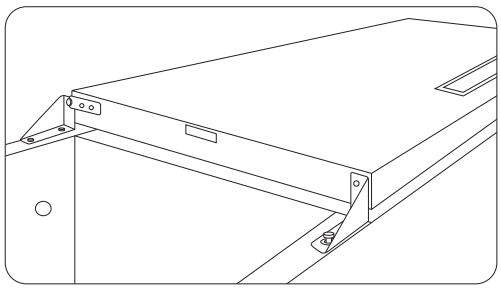

G590-A_G591-A_GD879-A_GD880-A_A5_v4_20240315.indb 5 2024/3/15 17:47

Lock/Unlock the Doors

A lock is fitted to the doors to ensure foodstuffs are kept secure within your POLAR appliance.

Use the keys provided to lock/unlock the doors.

Fitting the Shelves & Floor Guards

1. Place one set of shelf guides on either side of the cabinet at the desired height.
2. Slide the shelf into place.
3. Repeat for the remaining shelves.
4. Place the floor guards on the floor of the cabinet, ensuring the flat side is clear of the floor.

Note: This is vital for ensuring correct drainage of condensation.

Operation

Storing Food

To get the best results from your POLAR appliance, follow these instructions:

- Only store foodstuffs in the appliance when it has reached the correct operating temperature.
- Do not place uncovered items as below inside the appliance, as this can lead to a damaged and leaking evaporator, and thus void your warranty: hot food, hot liquids, acidic fluids, acidic products. Wrap or cover food where possible.
- Do not obstruct the fans inside the appliance.
- Avoid opening the doors for prolonged periods of time.

Turn On

1. Ensure the power switch is set to [**O**] and turn on at the socket.
2. Switch on the Power [**I**]. The current temperature within the appliance is displayed.

Control Panel

To unlock / Lock the keyboard press ▲ and ▼ together for 3 seconds. Display will flash PON (unlocked) / POF (locked).

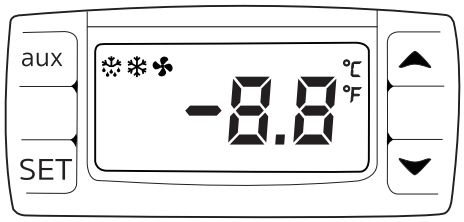

Set the Operating Temperature

1. Hold the **SET** button for 3 seconds. The display will flash.
2. Press the ▲ or ▼ buttons to display the required temperature.
3. Press the **SET** button to store the temperature.

Manual Defrost

Press and hold the defrost button "**aux**" for 2 seconds to begin a manual defrost. The defrost light illuminates.
The defrost cycle will end automatically.

Condensation and ice will form with frequent and prolonged opening of the doors. Operating outside of the recommend temperature range and placing next to a heat source will also increase the amount of ice and internal/external condensation. If external condensation occurs wipe the surface down with a cloth.
Excessive ice will result in longer running times that will increase energy consumption and increase the deterioration of components.

G590-A_G591-A_GD879-A_GD880-A_A5_v4_20240315.indb 6 2024/3/15 17:47

Cleaning, Care & Maintenance

Defrost appliance at least every 3 months, more often if required.

Switch off and disconnect from the power supply before cleaning.

- Clean the interior of the appliance as often as possible.
- Do not use abrasive cleaning agents. These can leave harmful residues.
- Clean the door seal with warm soapy water.
- Always wipe dry after cleaning.
- Do not allow water used in cleaning to run through the drain hole into the evaporation pan.
- Take care when cleaning the rear of the appliance. Sharp edges can cut.

Stainless Steel Care

To maintain the stainless steel exterior of your Polar item, please consider the following information:

Never:
- Use abrasive Scourers or scrubbing pads, etc.
- Use Chlorinated or acidic detergents
- Allow anything e.g. food, dirt, cleaning chemicals to remain on the surface for longer than necessary, clean them off right away.
- Allow the surface to remain wet.

Do:
- Clean often.
- Use soft Cloths or plastic Scourers.
- Rub with the grain of the metal, rather than across it.
- Use detergents and polish designed for cleaning Stainless Steel.
- Ensure that the cleaning products are washed off fully and that the steel is left dry.

Routine Maintenance

Cleaning the Condenser

- The condenser is part of the refrigeration system. The condenser requires monthly cleaning.
- Always disconnect power supply before carrying out Routine Maintenance.
- Failure to clean the condenser will reduce the performance and life of your Polar unit and may invalidate your warranty.

The condenser is located below the refrigeration cabinet. These models have a removable filter which can be cleaned with a vacuum cleaner.

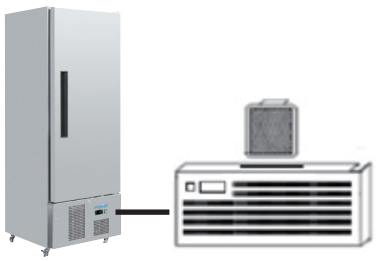

G590-A_G591-A_GD879-A_GD880-A_A5_v4_20240315.indb 7 2024/3/15 17:47

Troubleshooting

A qualified technician must carry out repairs if required.

Fault	Probable Cause	Solution
The appliance is not working	The unit is not switched on	Check the unit is plugged in correctly and switched on
	Plug or lead is damaged	Replace plug or lead
	Mains power supply fault	Check mains power supply
The appliance turns on, but the temperature is too high/low	Too much ice on the evaporator	Defrost the appliance
	Condenser blocked with dust	Clean the Condenser
	Doors are not shut properly	Check doors are shut and seals are not damaged
	Appliance is located near a heat source or air flow to the condenser is being interrupted	Move the refrigerator to a more suitable location
	Ambient temperature is too high	Increase ventilation or move appliance to a cooler position
	Unsuitable foodstuffs are being stored in the appliance	Remove any excessive hot foodstuffs or blockages to the fan
	Appliance is overloaded	Reduce the amount of food stored in the appliance
The appliance is leaking water	The appliance is not properly levelled	Adjust the screw feet to level the appliance (if applicable)
	The discharge outlet is blocked	Clear the discharge outlet
	Movement of water to the drain is obstructed	Clear the floor of the appliance (if applicable)
	The water container is damaged	Consult a qualified Technician
	The drip tray is overflowing	Empty the drip tray (if applicable)
The appliance is unusually loud	Loose nut/screw	Check and tighten all nuts and screws
	The appliance has not been installed in a level or stable position	Check installation position and change if necessary

POLAR

G590-A_G591-A_GD879-A_GD880-A_A5_v4_20240315.indb 8 2024/3/15 17:47

Technical Specifications

Note: Due to our continuing program of research and development, the specifications herein may be subject to change without notice.

Model	Voltage	Power	Current	Temperature Range
G590-A	220-240V 50Hz	300W	1.8A	-2°C to 8°C
G591-A	220-240V 50Hz	600W	4.0A	-10°C to -20°C
GD879-A	220-240V 50Hz	600W	4A	-2°C to 8°C
GD880-A	220-240V 50Hz	700W	3.3A	-10°C to -20°C

Model	Capacity (litres)	Gross Volume (litres)	Refrigerant	Dimensions H x W x D mm	Weight (kg)
G590-A	313	440	R290 90g	2000 x 680 x 700	130
G591-A	313	440	R290 90g	2000 x 680 x 700	130
GD879-A	671	960	R290 120g	2000 X 1340 x 700	165
GD880-A	671	960	R290 150g	2000 x 1340 x 700	165

Note: For optimal product performance and efficiency, please ensure to mind the net usable capacity (load limit) when filling.

POLAR

G590-A_G591-A_GD879-A_GD880-A_A5_v4_20240315.indb 9 2024/3/15 17:47

Electrical Wiring

The plug is to be connected to a suitable mains socket.

This appliance is wired as follows:

- Live wire (coloured brown) to terminal marked L
- Neutral wire (coloured blue) to terminal marked N
- Earth wire (coloured green/yellow) to terminal marked E

The appliances must be earthed.



If in doubt consult a qualified electrician.

Electrical isolation points must be kept clear of any obstructions. In the event of any emergency disconnection being required they must be readily accessible.

Compliance

The product must not be disposed of as household waste. To help prevent possible harm to human health and/or the environment, the product must be disposed of in an approved and environmentally safe recycling process. For further information on how to dispose of this product correctly, contact the product supplier, or the local authority responsible for waste disposal in your area.

POLAR parts have undergone strict product testing in order to comply with regulatory standards and specifications set by international, independent, and federal authorities.

POLAR products have been approved to carry the following symbol:



All rights reserved. No part of these instructions may be produced or transmitted in any form or by any means, electronic, mechanical, photocopying, recording or otherwise, without the prior written permission of POLAR.

Every effort is made to ensure all details are correct at the time of going to press, however, POLAR reserve the right to change specifications without notice.

G590-A_G591-A_GD879-A_GD880-A_A5_v4_20240315.indb 10 2024/3/15 17:47

DECLARATION OF CONFORMITY

• Conformiteitsverklaring • Déclaration de conformité • Konformitätserklärung • Dichiarazione di conformità • • Declaración de conformidad

Equipment Type • Uitrustingstype • Type d'équipement • Gerätetyp • Tipo di apparecchiatura • Tipo de equipo		**Model** • Modèle • Modell • Modello • Modelo	
G-Series Upright:	13. Double Stable Door Gastro Fridge 1200Ltr	**G-Series Upright:**	13. CW195 (& -E)
1. Slimline Fridge 440Ltr	14. Double Stable Door Gastro Freezer 1200Ltr	1. G590 (& -E)	14. CW196 (& -E)
2. Slimline Freezer 440Ltr	15. Gastro Display Fridge 600Ltr	2. G591 (& -E)	15. CW197 (& -E)
3. Fridge 600Ltr	16. Double Door Gastro Display Fridge 1200Ltr	3. G592 (& -E)	16. CW198 (& -E)
4. Freezer 600Ltr		4. G593 (& -E)	
5. Double Door Fridge 1200Ltr		5. G594 (& -E)	
6. Double Door Freezer 1200Ltr		6. G595 (& -E)	
7. Double Door Slimline Fridge 960Ltr		7. GD879 (& -E)	
8. Double Door Slimline Freezer 960Ltr	**U-Series Upright:**	8. GD880 (& -E)	**U-Series Upright:**
9. Double Door Fridge 1200Ltr White	17. Fridge 650Ltr	9. CC663 (& -E)	17. U632 (& -E)
10. Double Door Freezer 1200Ltr White	18. Freezer 650Ltr	10. CD616 (& -E)	18. U633 (& -E)
11. Stable Door Gastro Fridge 600Ltr	19. Double Door Fridge 1300Ltr	11. CW193 (& -E)	19. U634 (& -E)
12. Stable Door Gastro Freezer 600Ltr	20. Double Door Freezer 1300Ltr	12. CW194 (& -E)	20. U635 (& -E)

Application of Territory Legislation & Council Directives(s) Toepassing van Europese Richtlijn(en) • Application de la/des directive(s) du Conseil • Anwendbare EU-Richtlinie(n) • Applicazione delle Direttive • Aplicación de la(s) directiva(s) del consejo	**Machinery Directive 2006/42/EC** **Supply of Machinery (Safety) Regulations 2008** EN 60335-1:2012 +A11:2014 +A13:2017 +A1:2019 +A14:2019 +A2:2019 EN 60335-2-89:2010 +A1:2016 +A2:2017 EN 62233:2008 **Electro-Magnetic Compatibility (EMC) Directive 2014/30/EU - recast of 2004/108/EC** **Electromagnetic Compatibility Regulations 2016 (S.I. 2016/1091)** EN 55014-1:2017 +A11:2020 EN 55014-2:2015 EN IEC 61000-3-2:2019 +A1:2021 EN 61000-3-3:2013 +A1:2019 **Regulation (EU) 2015/1095 - Ecodesign professional refrigerators** EN 16825: 2016 +A1:2019 **Restriction of Hazardous Substances Directive (RoHS) 2015/863 amending Annex II to Directive 2011/65/EU** **Restriction of the Use of Certain Hazardous Substances in Electrical and Electronic Equipment Regulations 2012 (S.I. 2012/3032)**
Producer Name • Naam fabrikant • Nom du producteur • Name des Herstellers • Nome del produttore • Nombre del fabricante	**Polar**

I, the undersigned, hereby declare that the equipment specified above conforms to the above Territory Legislation, Directive(s) and Standard(s).
Ik, de ondergetekende, verklaar hierbij dat de hierboven gespecificeerde uitrusting goedgekeurd is volgens de bovenstaande Richtlijn(en) en Standaard(en).
Je soussigné, confirme la conformité de l'équipement cité dans la présente à la / aux Directive(s) et Norme(s) ci-dessus
Ich, der/die Unterzeichnende, erkläre hiermit, dass das oben angegebene Gerät der/den oben angeführten Richtlinie(n) und Norm(en) entspricht.
Il sottoscritto dichiara che l'apparecchiatura di sopra specificata è conforme alle Direttive e agli Standard sopra riportati.
El abajo firmante declara por la presente que el equipo arriba especificado está en conformidad con la(s) directiva(s) y estándar(es) arriba mencionadas.

Date • Data • Date • Datum • Data • Fecha	**19th April 2022**	
Signature • Handtekening • Signature • Unterschrift Firma • Firma	DocuSigned by: Ashley Hooper B39382C9FD9C478...	DocuSigned by: Eoghan Donnellan D352874F7FAB460...
Full Name • Volledige naam • Nom et prénom • Vollständiger Name • Nome completo • Nombre completo	**Ashley Hooper**	**Eoghan Donnellan**
Position • Functie • Fonction • Position • Qualifica • Posición	**Technical & Quality Manager**	**Commercial Manager/ Importer**
Producer Address • Adres fabrikant • Adresse du producteur • Anschrift des Herstellers • Indirizzo del produttore • Dirección del fabricante	**Fourth Way, Avonmouth, Bristol, BS11 8TB United Kingdom**	**Unit 9003, Blarney Business Park, Blarney, Co. Cork Ireland**

POLAR

POLAR

http://www.polar-refrigerator.com/

G590-A_G591-A_GD879-A_GD880-A_A5_v4_2024/03/15