The Brice Classic Mandoline is the ideal light weight kitchen accessory.



CLASSIC MANDOLINE

- Constructed from high-grade stainless steel
- Slices, juliennes, matchsticks most vegetable types
- Lever adjustable, built-in blade block 3mm/10mm
- Built-in guard
- 4-point non-skid stand

L M

Light Duty; Manual operation

BRO20638CHB
Classic Mandoline

Using and maintaining the Classic Mandoline

WARNING: The blades of the Mandoline are extremely sharp operate with care. Always use the hand guard when slicing.

PLEASE READ THESE INSTRUCTIONS CAREFULLY BEFORE ATTEMPTING TO OPERATE YOUR CHEF MANDOLINE

1. SET UP FOR USE

Turn your mandoline upside down to expose the folding stand with rubber feet at one end. Grab the crossbar at the end with the rubber feet and pull it up to about a 45° angle. Then grab the other crossbar and pull it out, inserting it into the lip on the top of your mandoline. **(CAUTION: Be careful of the set of cutters just to the side of this crossbar.)** You are forming an upside down "V" with the folding stand. Turn your mandoline over, resting the rubber feet on your working surface. Your mandoline should now look like a small ramp.

When using the mandoline, face it away from you when slicing and grip the stand with your free hand to help stabilise it. Place a small plate underneath the mandoline to catch the cut product.

2. ADJUSTMENTS

All cuts are made by adjusting three key parts of your mandoline:

- Main plate No.8
- Fluted cutting plate No.9
- Set of cutters No.5 at the center back of the mandoline

The main plate and the fluted cutting plate are raised and lowered by their respective levers that are directly below each plate. You may notice that the levers are somewhat stiff, it is important that they remain so. Try moving the levers up and down to see how they adjust the blades.

The set of cutters is adjusted by the crank handle No.10 . You will see that the set of cutters has two sides. The crank handle is used to switch sides. When using the set of cutters, you should lock the crank handle by pushing it onto one of the two pins No.11 .

IMPORTANT: The main plate must be raised all the way every time you switch sides in order to avoid damaging the set of cutters.

The Basic/Straight Cut

Straight slices are made using the straight (or main plate) blade No.3, which has a razor sharp edge. The fluted cutting plate No.9 should be lowered and the crank handle No.10 should be disengaged from the pins and allowed to dangle straight down. (This will ensure neither gets damaged.) Raising and lowering the main plate controls the thickness of your slices. The lower the main plate, the thicker the slices. (If it is too low, you will see that it interferes with the set of cutters). Now you can place the hand guard on its rails making sure the arrow on its handle is pointing down the ramp. Place your vegetable in the hand guard's hopper and begin slicing.

Matchstick, Julienne And French-Fry Cuts

These cuts are made by the set of cutters. First raise the main plate completely. Then select your cut, for matchstick (or julienne) cuts, use the small spacing, for french-fry use the large spacing. Be sure to push the crank handle into one of the two pins to hold the set of cutters in place. Now lower the main plate to get your desired thickness.

Place the hand guard on its rails, making sure the arrow on its handle is pointing down the ramp. Place your vegetable in the hand guard's hopper and begin slicing.

Please Note: Because there are many cutting surfaces engaging the vegetable, it will be harder to push the vegetable through the set of cutters than to prepare simple slices.

Crinkle And Gaufrette (Lattice) Cuts

Remove the stainless steel hand guard – it is not used with the fluted cutting plate, you can only use the polycarbonate hand guard for these types of cuts. Take the set of cutters offline by first raising the main plate and then disengaging the crank handle and letting it hang straight down. Now completely lower the main plate so that vegetables can freely slide over it without being sliced.

Raise the plate with the fluted cutting blade until it clears the level of the central cutting plate. Pressure and motion will be applied to the vegetable by hand. The safest way is to "palm" the vegetable with fingers extended.

For gaufrettes (lattice cut), after slicing the vegetable across the fluted blade for the first slice, turn the vegetable 90° for the second. Keep turning the vegetable at a 90° angle before each new slice. If your slices tear, you are cutting too thin and you should raise the fluted blade, if they have no lace-pattern, then you are cutting too thick and you should lower the blade.

Since the hand guard is not used for these cuts, we strongly advise you to use a safety glove that is highly cut-resistant.

SAFETY

Using the stainless steel hand guard

Lower the main plate to the desired thickness.

Place the hand guard on its rails making sure the arrow on its handle is pointing down the ramp.

Place your vegetable in the hand guard's hopper and begin slicing.

Using the polycarbonate hand guard

The safety guard can and should be used on all cuts. Place the vegetable to be cut against the guard's stainless steel spikes to help hold it securely in place. Position the guard at the top of the mandoline with its cutout arrows pointing up and down, and slice the vegetable by moving the guard (and vegetable) up and down the mandoline.

4. CLEANING & MAINTENANCE

Disengage the set of cutters, lower the fluted blade, and drop the main plate even with the central cutter. Hold the Mandoline firmly and rinse and clean under warm water with a nylon scrub brush. Be sure to remove any large pieces in the set of cutters with the brush. Your mandoline is dishwasher safe. However, frequent cleaning this way can contribute to the dulling of the cutting edges. From time to time, check the tightness of the nuts.

A washing with hot water before the first use is recommended.

A washing after each first use is necessary and ensures a healthy equipment.

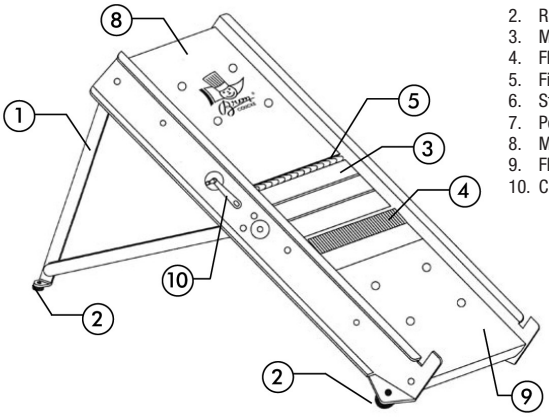

1. Frame with folding stand
2. Rubber feet
3. Main plate blade
4. Fluted cutting blade
5. Fixed cutters
6. Stainless steel hand guard
7. Polycarbonate hand guard
8. Main plate
9. Fluted cutting plate
10. Crank handle

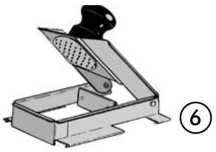

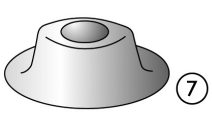

Specifications

Width: 135mm
Depth: 45mm
Height: 410mm
Net weight: 1.5kg

Brice™

Brice Australia Pty. Ltd. ABN 71 413 589 669
100% Australian owned and operated
Copyright ©2017 Brice Australia Pty. Ltd.

BRICE HEAD OFFICE:
11 Holloway Drive,
Bayswater, Victoria 3153 Australia

Ph: 1300 664 880
www.briceaust.com.au
email: info@briceaust.com.au

BA173.BRO28638CHB 5/17