CHEFS DEPOT
Culinary Supplies

191 - 241 SP - 193

Classic - Steel





CARPIGIANI

CARPIGIANI **SOFT SERVE & SHAKE CONSULTING**

CARPIGIANI SOFT SERVE & SHAKE CONSULTING consultants transform your idea into a successful business!





Fundamentals and Advantages





PERFORMANCE AND QUALITY

Create Soft Serve Gelato, Ice Cream, Sorbets and Frozen Yogurt. Thanks to the 193 independent cylinders, it is now possible to simultaneously serve and even mix different recipes and products.



Creamy Soft Serve Gelato

Thanks to the H-O-T system and to the type of feed system used (gravity or pump), users can choose the desired consistency of the Soft Serve, from a delicate vanilla to robust chocolate.



Soft Serve Sorbets

Choose the desired consistency of the Soft Serve Sorbets, thanks to the H-O-T system and to the type of feed system used (gravity or pump).



Frozen Yogurt

Choose the desired consistency of the Frozen Yogurt, to produce a classic frozen yogurt or a unique soft serve gelato yogurt. Thanks to the H-O-T system and to the type of feed system used (gravity or pump).



Custom shape Gelato



Soft Serve Core Production

Legend: ✓ ONLY Optional upon purchase ✓ Optional available even after purchase

PERFORMANCE AND QUALITY



Star Door
Star Door allows the use of the new nozzles and the single-portion kit.

Monoportion kit
Kit of nozzles suitable for filling small cups, cannoli and other frozen dessert monoportions.







Nozzles
Customize the Soft Serve by choosing new and unique nozzles that fit your style.

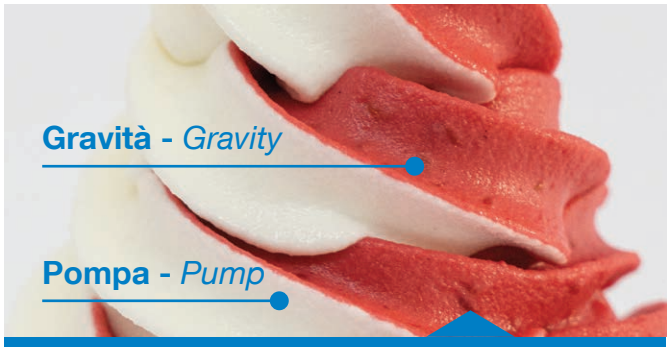

Pump / Gravity kit (only for 193 P models with POM beaters). Run one pump- & one gravity- fed cylinder at the same time.



Winter Door (only for 193 models). This unique door is composed of two separate doors. Giving the user the freedom to operate one or both cylinders or even operate one cylinder while cleaning the other. The twist door is inhibited.

Legend: ✓ ONLY Optional upon purchase ✓ Optional available even after purchase

PERFORMANCE AND QUALITY

Hard-O-Tronic®. The electronic control system gives you the power to quickly choose the consistency of the Soft Serve in a simple manner and change it for a variety of styles of your choosing.

Soft Serve Core (for 191 and 241 SP models). Inject syrup directly into the Soft Serve during extraction, thanks to the peristaltic pump system. The cabinet for housing the syrup and the pump can be positioned under the machine or on the left side depending on the user's installation preferences.







Choice of **MIX FEEDING SYSTEM**

Pump - Version P

Ideal for creating dry and compact Soft Serve. Pressurized steel pump with advanced thermoplastic polymer gears. Thanks to the holes in the pump regulator, it is possible to obtain 40-80% overrun. It is possible to adjust the overrun even when the tank is full!



Gravity - Version G

Ideal for a dry and compact Soft Serve with up to 40% overrun. The different diameters of the feeding tube holes naturally dose the mixture with air. It is possible to adjust the overrun even when the tank is full, using the overrun adjuster, thanks to the feeding tube holes, which are above and below the mix.



Legend: ONLY Optional upon purchase Optional available even after purchase

PERFORMANCE AND QUALITY

BEATER Choice

2E-RSI High Efficiency Beater
Ideal for soft and Creamy Soft Serve. Stainless steel beater with plastic scrapers and removable shaft.



High Efficiency Beater in POM
Convenient Monobloc beater in food-grade plastic. Standard in gravity versions.



1.75 L Direct expansion cylinder
Optimized refrigeration process. Faster freezing times & more energy savings. Pre-loading operation is simple and safe, thanks to the new position of the feed hole.

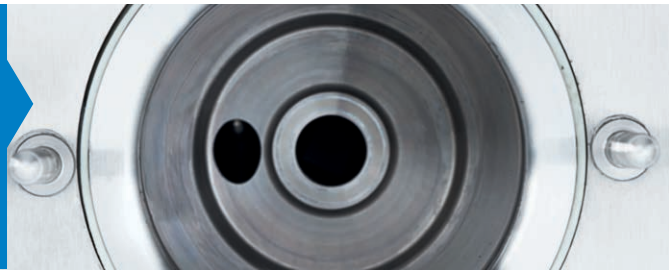

CONVENIENCE

Scan the **QR Code** on the front of the machine to access the most up to date equipment information: Instruction Manual, Carpi Care kit & Carpi Clean kit.

Versatile machine* (only for 193 models). Thanks to three different functions, it is possible to choose the side on which you want to operate. Left side only or right side only in low season, both during high productivity.

* With the Optional Winter Door.

Tank Agitator
Prevents product stratification during storage and improves heat exchange during pasteurization.





Adjustable dispensing speed
Adjustable delivery flow to meet all volume and speed needs.

Legend: ✓ ONLY Optional upon purchase ✓ Optional available even after purchase

CONVENIENCE

New solutions for maximum **convenience during use**

Self Closing

User-friendly Self Closing levers automatically close to stop the flow of product, eliminating any waste. Automatic self closing levers are easy to assemble & disassemble. Ideal for rotating staffs.





Only You

Customize the front panel of the machine by choosing from the array of colors found in the dedicated catalog.



Total Only You

The machine can be completely colored for a consistent look representative of the style of the product, location or brand. Choosing from the array of colors found in the dedicated catalog.



Cabinet to easily position the machine inside the shop.
Thanks to the cabinet, it is possible to move the machine easly and safety.
Cabinet includes internal chamber to house materials.



Legend: ONLY Optional upon purchase Optional available even after purchase

SAVINGS

New **high-performance** electric gearmotors and condensers

Independent pump transmission. (P version). Extends the life of the pump and gears. Ensures flexibility with high performance.



Choice of **COOLING**

Water Cooled machine
Refrigeration system is cooled thanks to the inlet and outlet water circuit, conveniently located at the rear of the machine.



Air cooled machine
Thanks to the rear chimney, it is possible to optimize the installation space and to place the machines side by side.



SAFETY



Ergonomic design
Reduced risk of injury, with corners even rounder where the operator works.

TEOREMA

Teorema
Guarantees facilitated assistance by providing on-line monitoring and diagnosis on a tablet, phone or PC wherever you are.



Blockchain technology (only for 241 SP models). Add the secure PAY PER USE sales method with Blockchain technology enabled machines. Thanks to an innovative sensor able to read the quantity of mixture in the tank with extreme precision.

Button lock
For added security, the display buttons can be locked to prevent accidental errors.

Black-out and water outage. After a power or water failure, if the temperature-time parameters guarantee that the mixture has not undergone any alteration, the machine resumes the program in progress. Otherwise, if the machine is self-pasteurizing, a pasteurization cycle is automatically started, warning the operator with a message on the display. In the case of the non self-pasteurizing version, the machine requires washing.

Legend: ✓ ONLY Optional upon purchase ✓ Optional available even after purchase

HYGIENE

Easy cleaning, **guaranteed hygiene**

Scheduled start. Set the production, pasteurization, and storage programs to automatically run at a convenient time for you, such as overnight, to be fully operational the next day.

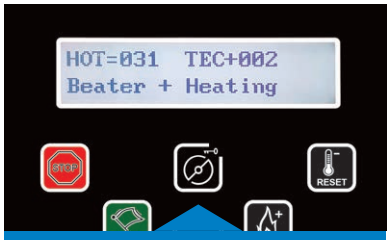

Multifunctional Cleaning Button

Possibility to activate or deactivate the pump and the beater individually or together according to cleaning needs. One of the functions is hot cleaning. By simultaneously activating the stirrer and the heating of the cylinder surface, the production grease residues are quickly dissolved.

Wash kit

Water Tap is added over the tank to facilitate cleaning.



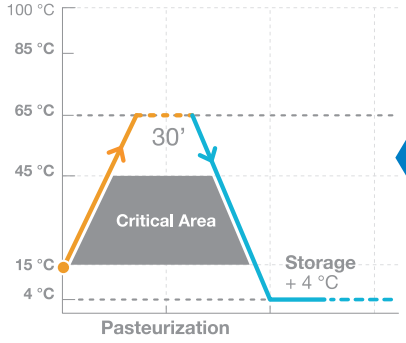

With the automatic **self-pasteurization** system you can choose when to wash the machine up to a maximum interval of 42 days. As a further guarantee of hygienic safety, if the operator does not perform the complete cleaning at the end of the set days, the machine goes into automatic block.



Removable pump shaft

Simplifies cleaning procedures, guaranteeing maximum hygiene and reliability.

Carpi Care kit

Custom kits, designed to always keep your machine hygienically perfect.

CARPIGIANI services

Carpi Clean kit



Rubber tank lid

The lid can be partially opened to fill tank without completely removing lid. In addition, on the 193 models, one can open and fill each tank separately, while preventing any mix from going in the wrong tank.

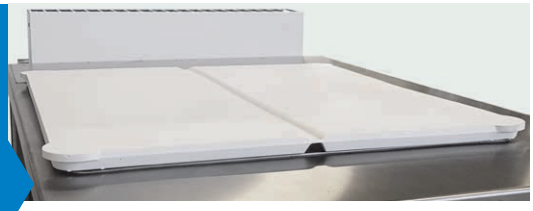





Legend: ✓ ONLY Optional upon purchase ✓ Optional available even after purchase

MACHINE CONFIGURITATION

TANK CONFIGURATION

CHOOSE THE PRODUCT FEED SYSTEM



Pump



Gravity

Optional



Wash kit

BEATER & DOOR CONFIGURATION

CHOOSE THE TYPE OF BEATER

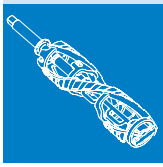

2E-RSI Beater

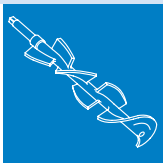

POM Beater

CHOOSE DOOR TYPE

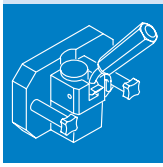

Standard Door

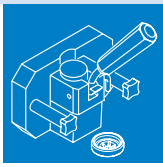

Star Door

Optional

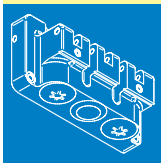

Winter Door
(only for 193 models)

Optional

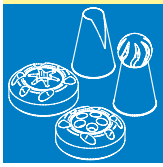

Nozzles

Optional



Self Closing Door

Optional



Monoportion kit

Legend: ✓ ONLY Optional upon purchase ✓ Optional available even after purchase

VISUAL CONFIGURATION

CUSTOMIZE THE FRONT PANEL

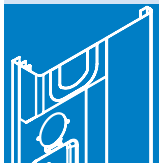

Classic Plastic Front Panel



Stainless Steel Front Panel
(Standard for 241 SP)

Optional



Only You Personalization

Optional



Total Only You Personalization

TECHNICAL CONFIGURATION

CHOOSE THE TYPE OF CONDENSATION

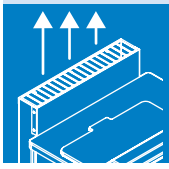

Air Cooled machine

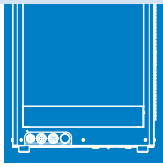

Water Cooled machine

Optional

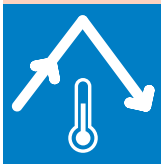

Self-Pasteurization
(Standard for 241 SP)

CHOOSE THE TYPE OF POWER SUPPLY



Power supply Single-phase / Three-phase

ACCESSORIES CONFIGURATION

Optional




Soft Serve Core Below storage
(for 191 and 241 SP models)




Soft Serve Core Side Storage
(for 191 and 241 SP models)

Optional



Cabinet

Optional

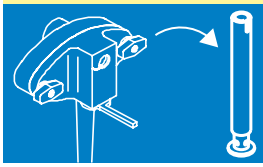

Pump kit / Gravity kit
(only for 193 models)

Optional

TEOREMA

Teorema

Optional

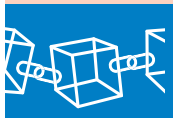

Blockchain Technology
(only for 241 SP models)

Legend: ✓ ONLY Optional upon purchase ✓ Optional available even after purchase

CARPIGIANI SERVICE

WHO WE ARE

Carpigiani Services. Always by your side! The extensive Carpigiani service network is at your disposal with a widespread assistance network that guarantees a wide coverage of the territory with over 480 authorized service centers and 1500 specialized technicians around the world, for over 70 years guaranteeing a widespread, global presence. Carpigiani Services ensures rapid and professional assistance.



WHAT WE OFFER

Original spare parts. Carpigiani original spare parts, manufactured in compliance with national and international food safety regulations, ensure the durability of the components and extend the life of the machine. They are the only ones able to guarantee efficiency and safety. Carpigiani original spare parts are guaranteed for 1 year.



Carpi Care kit

6 MONTHS

Carpi Clean kit

Periodically ask your dealer **Carpi Care kit and Carpi Clean kit.** Dedicated kit of gaskets and brushes to keep each machine hygienic & clean.



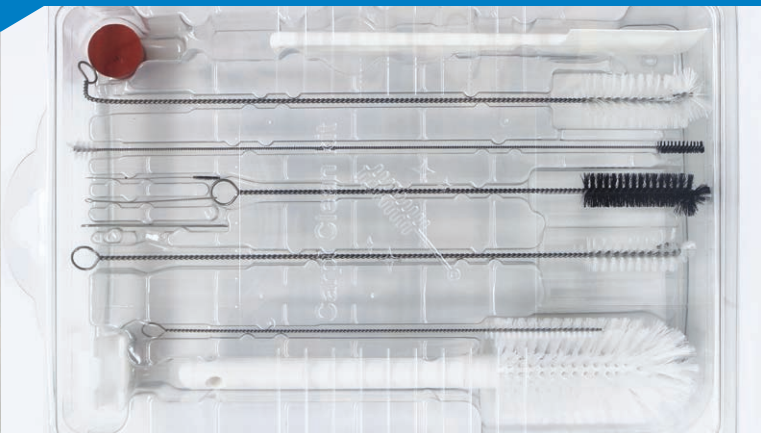

CARPIGIANI SERVICE

WHAT WE OFFER

Specialized technicians. Carpigiani technicians are professionals who are always up-to-date thanks to solid and constant training courses that guarantee high levels of competence for any inspection, maintenance, cleaning and repair intervention.



Preventive maintenance. Thanks to periodic checks, entrusted to certified technicians, the machine can always work in optimal conditions, preventing any downtime.

Extended Warranty. Operate machine in complete tranquility, thanks to the Carpigiani extended warranty. In case of needs, in fact, Carpigiani technicians are able to restore machine operation with original spare parts.



Scheduled Cleaning. Possibility of entrusting the periodic cleaning of the machine to expert technicians.





Teorema. Teorema Remote Control and diagnosis system for remote monitoring of machine operation. The customer can access the machine via computer, tablet or mobile device to remotely monitor operations. Teorema also facilitates the assistance service: Carpigiani technicians are alerted on the configuration parameters as if they were operating directly on the machine.

Technical Data - Dimensions

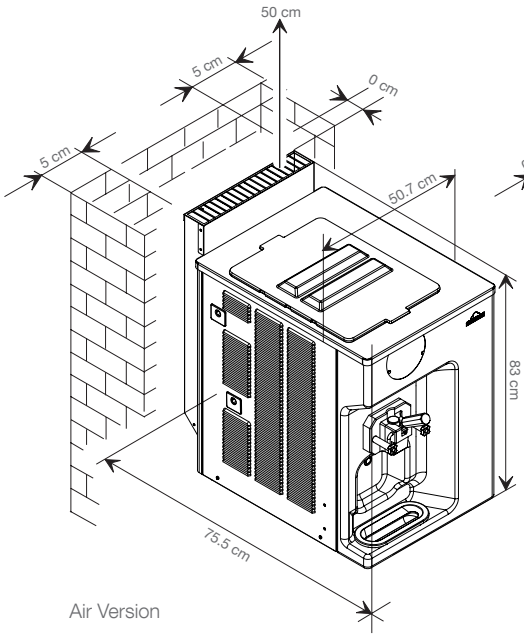

Air Version

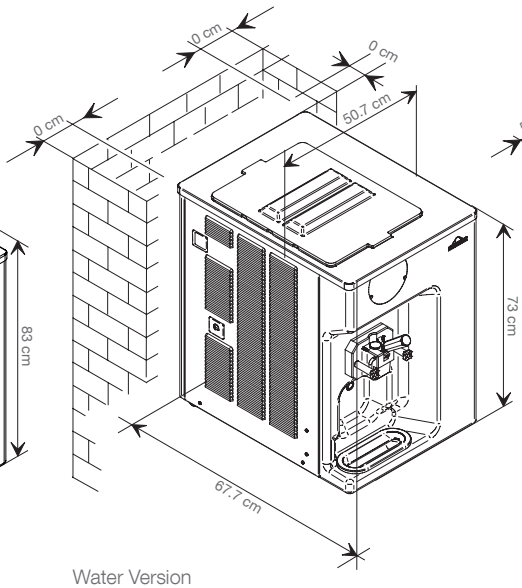

Water Version

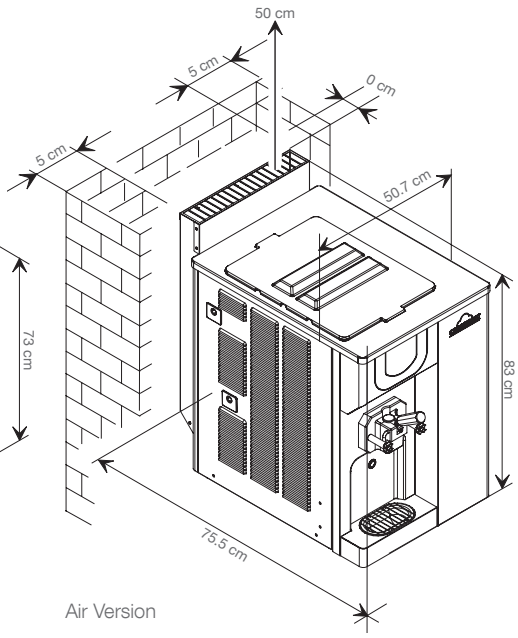

Air Version

191 CLASSIC and STEEL, 241 SP STEEL

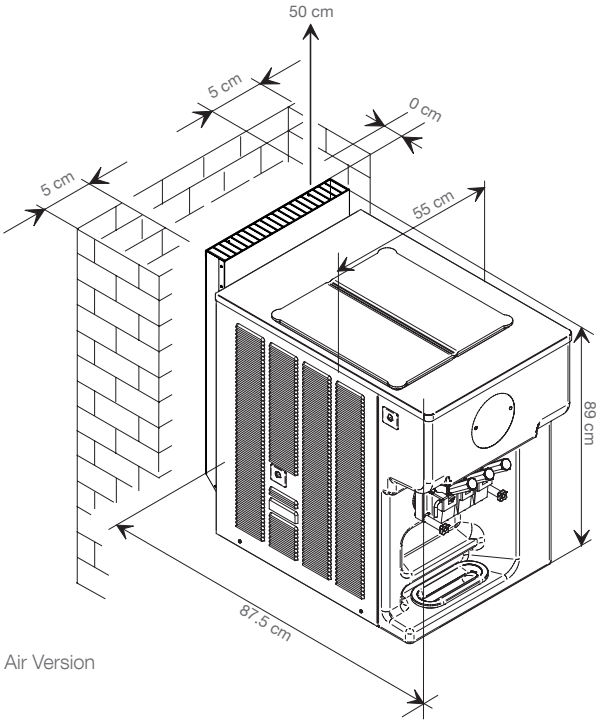

Air Version

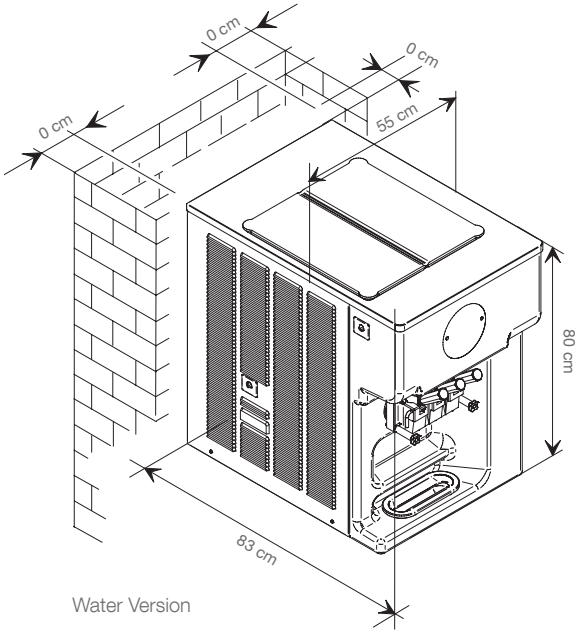

Water Version

193 CLASSIC and STEEL

printed 01/2024

191 - 241 SP - 193

Classic - Steel



	Flavours	Mix Delivery System	Hourly production (75gr portions)		Tank Capacity	Cylinder Capacity	Rated Power Input	Fuse Size	Power Supply	Cooling System	Refrig-erant	Net Weight
			POM	2E-RSI	lt	lt	kW	A	Volt Hz Ph			kg
191 Classic P	1	Pump	245*	255*	12	1.75	2.4	16	230/50/1**	Air, water optional	R452***	140
191 Classic G		Gravity	230*	-	18							130
191 Steel P	1	Pump	245*	255*	12	1.75	2.4	16	230/50/1**	Air, water optional	R452***	140
191 Steel G		Gravity	230*	-	18							130
241 SP Steel P	1	Pump	340*	350*	12	1.75	2.9	10	400/50/3**	Air, water optional	R452***	140
241 SP Steel G		Gravity	300*	-	18							130
193 Classic P	2+1	Pump	435*	485*	12+12	1.75	4.7	16	400/50/3**	Air, water optional	R452***	210
193 Classic G		Gravity	415*	-	18+18		4.5					190
193 Steel P	2+1	Pump	435*	485*	12+12	1.75	4.7	16	400/50/3**	Air, water optional	R452***	210
193 Steel G		Gravity	415*	-	18+18		4.5					190

*production capacity depends on the mix used and the room temperature **other voltages and cycles available upon request
***alternative solutions available.

191, 241 SP and 193 are produced by Carpigiani with Quality System UNI EN ISO 9001.

All specifications mentioned must be considered approximate; Carpigiani reserves the right to modify, without notice, all parts deemed necessary.

CARPIGIANI
carpigiani.com

CARPIGIANI services
CARPIGIANI SOFT SERVE AND SHAKE CONSULTING
GELATO MUSEUM

Via Emilia, 45 - 40011 Anzola dell'Emilia - BOLOGNA, Italy - T. +39 051 6505111 - info@carpigiani.it

an Ali Group Company

ALI GROUP
the spirit of excellence