The Brice Vivaldi Mandoline is the ideal light weight kitchen accessory perfect for aspiring chefs.

The Vivaldi Mandoline Features:

- Solid stainless steel body – hygienic and durable.
- Rigid frame with 2 handles and a non-slip reversible stand.
- Heavy duty (BPA free) plastic guard for operator safety.
- An adjustable bearing plate which enables thickness control when cutting product.
- Creates perfectly sliced vegetables or fruit in seconds.
- Comes with two removable cutting blades – 2mm to create julienne slices and 10mm to create french fries.
- Easy to use and clean.
- Professional cut every time.
- Lightweight and folds away for easy storage.



L M

Light Duty; Manual operation

Model BR010000

Vivaldi Mandoline

Using and maintaining the Vivaldi Mandoline

WARNING: The blades of the Mandoline are extremely sharp operate with care. Always use the hand guard when slicing.

PLEASE READ THESE INSTRUCTIONS CAREFULLY BEFORE ATTEMPTING TO OPERATE YOUR VIVALDI MANDOLINE

Before use, be sure that the smooth blade's cutting edge is

firmly held under the 2 lugs on each side of the mandoline.

MOUNTING OF A "COMB" CUTTING BLADE UNIT:

Before the mounting of a "comb" cutting blade unit, it is essential to move the smooth blade (n°2) away from the bearing plate (n°1) using the knurled knob (n°3). Remember to tighten the knurled knob fixing the smooth blade in place. Insert the "comb" cutting blade unit (n°4 in diagram) in the placements provided on the stainless body of the mandoline frame. The "comb" cutting unit should be placed by matching the "cross" sign on the "comb" cutter (see diagram) with the "cross" sign inscribed on the side of the mandoline "holding tongue" (n°5 in diagram). If you place the "comb" cutter in the other sense it will not mount on the frame. Fold-back the small "holding tongue".

REMOVABLE OF A "COMB" CUTTING BLADE UNIT:

Slide back the small "holding tongue" (n°5) to uncover comple- tely the "comb" cutting blade unit (n°4). Then you can remove the "comb" cutting unit.

HOW TO MAKE STRAIGHT SLICING CUTS:

Make sure that the stand of the mandoline is completely unfolded and in a stable position on the work surface. Remove the "comb" cutting unit if one is mounted in the mandoline. Take off the unit blade cutting if equipped. Unscrew half turn the knurled knob and bring forward the straight blade closer to the wavy blade, then highly screw back again the knurled knob. adjust the thickness of the cut thanks to the lever (6) located at the rear of the mandoline.

Now you can slice your vegetables, always using the guard (n°7 in diagram) to hold and push your vegetables towards the blade.

HOW TO CUT INTO STICKS:

Install the chosen "comb" cutting blade unit after having moved the smooth blade back (see above) in order to give the necessary space for the placement of the "comb" cutting blade unit. Make sure that you fix the smooth blade so it can not move using the knurled knob.

Now set the thickness of slice that you want to cut by setting the height of the bearing plate using the lever. Now you can cut the vegetables always using the guard (n°7).

the dimensions of the sticks or "batonnets" that you cut are gene- rated by, on the one hand the choice of dimension of the "comb" cutting blade unit (2 or 10 mm) and on the other by the height of the slice that you take (adjustment of the bearing plate).

THE GUARD:

ALWAYS USE THE GUARD (7) FOR ALL CUTTING OPERATIONS IN ORDER TO AVOID ALL RISK OF INJURY!

The guard is equipped with stainless steel nails so that it can hold properly the vegetables pieces during the cutting operation. There is also a space hollowed out in the guard to hold long vegetables. In this case, cut with the guard in the direction of the arrows molded into the underside of the guard. Please note that this guard has a mobile central part (9) which sits proud of the rest of the guard when the stainless steel nails are pushed onto the vegetables to be sliced. When cutting you should press with a certain pressure on this mobile central part with the parlm of the hand in rder to push the vegetable down towards the cutter blade during the successive operations. again, we repeat, always use the guard for all cutting operations.

MAINTENANCE:

The Vivaldi's mandoline® is designed to require only minimal maintenance. From time to time one should resharpen the smooth cutting block, using a fine hone or stone.

always store the "comb" cutting units in their box, thus keeping their edges protected while not in use. For storage, give the man- doline its own place, often one chooses to hang the mandoline in the kitchen by one of its handles (see picture on the box of the mandoline). The guard can also be hung, if you choose to do so.

CLEANING:

Before using for the first time, it is recommended to wash mando- line in hot water. We recommend to remove the smooth blade and any "comb" cutting block unit from the frame (in order to avoid any risk of user injury!) before washing and to wash each part in hot water or hot water and soap separately.

Rinse and dry. The frame without the blades is washable in the dishwasher.

Specifications

W x D x H (mm): 135 x 330 x 405
Weight: 1.4kg

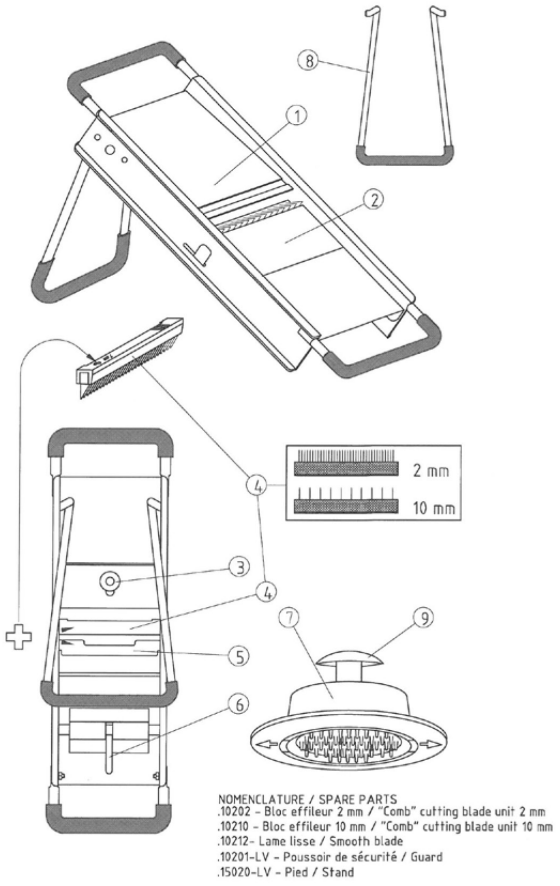

NOMENCLATURE / SPARE PARTS
.10202 – Bloc effileur 2 mm / "Comb" cutting blade unit 2 mm
.10210 – Bloc effileur 10 mm / "Comb" cutting blade unit 10 mm
.10212– Lame lisse / Smooth blade
.10201-LV – Poussoir de sécurité / Guard
.15020-LV – Pied / Stand

Brice Australia Pty. Ltd. ABN 71 413 589 669
100% Australian owned and operated
Copyright ©2019 Brice Australia Pty. Ltd.

BRICE HEAD OFFICE:
11 Holloway Drive, Bayswater,
Victoria 3153 Australia

Ph: 1300 664 880
www.briceaust.com.au
email: info@briceaust.com.au

80 YEARS OF EXCELLENCE 1939 ~ 2019

BA648.Vivaldi 2/19