PHOENIKS

CHEFS DEPOT
Culinary Supplies

STOCKPOT INDUCTION
MODEL NO: FISP6000

For large volume cooking

Setting	Power (watts)	Setting	Power (watts)
1	50	11	1900
2	100	12	2400
3	200	13	2900
4	300	14	3500
5	500	15	4000
6	700	16	4500
7	900	17	4900
8	1100	18	5300
9	1350	19	5800
10	1600	20	6000

Product Advantages:

- Special design for large volume cooking
- Stainless steel casing with 6mm vitroceramic glass top
- Knob Control + led
- Glass touch control panel having coil selector control, manual power setting (+/-) with display, preset power setting and timer control with display.

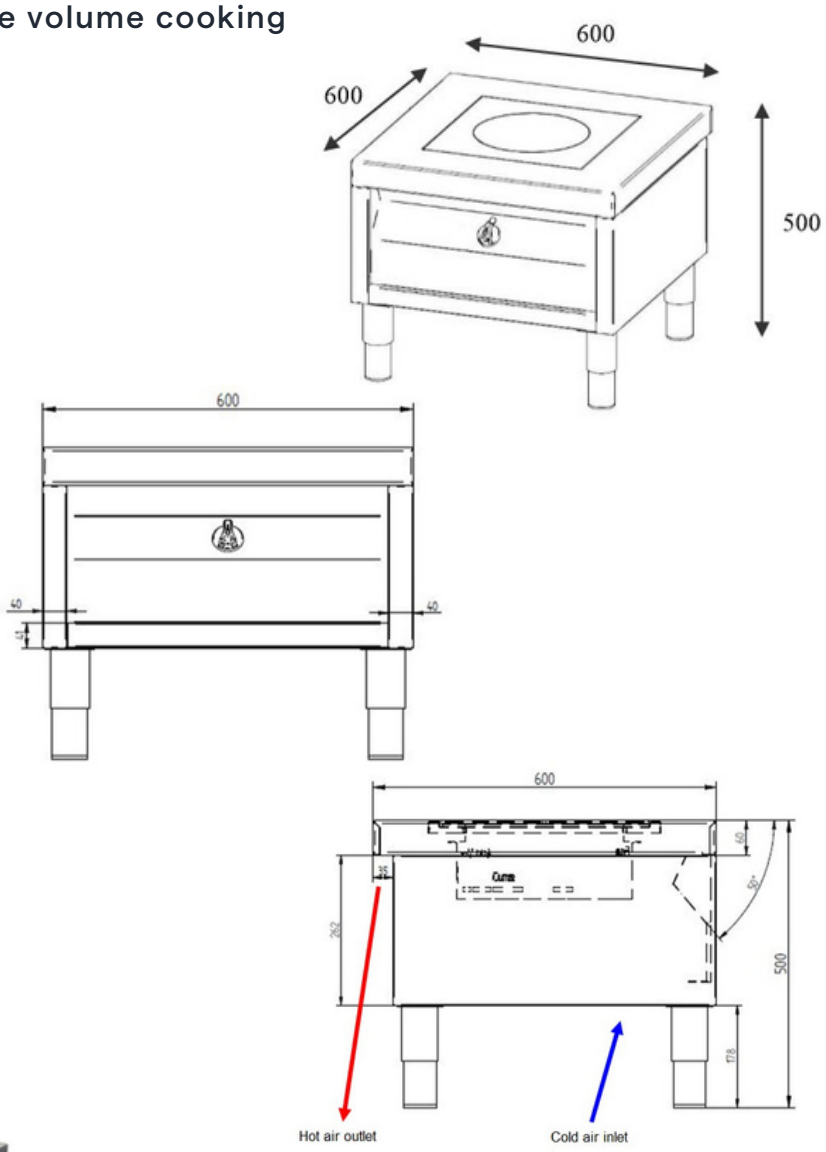



ADVENTYS

Technical Data:

Width x Depth x Height	600 x 600 x 500
Connected load (kW)	6.0
Voltage (V)	415 3 phase AC
Current	10A per phase
Recommended fuses (A)	3 x 15
External Structure	AISI 304 stainless steel
Frequency	50 hz
Weight (kg)	13
Control panel	Knob + LED
Surface	6mm vitroceramic glass

phoeniks.com.au
P- 1300 405 404
E- contact@phoeniks.com.au