CHEFS DEPOT
Culinary Supplies

INOMAK

# UFI2170SL
# Slimline Single Door Upright Freezer

- 560L
- Stainless steel door
- European design and manufacture
- On castors
- Embedded controller
- Ambient temperature of 40°C
- Internal corners rounded for ease of cleaning
- Self-closing door
- Reversible door
- R290 gas
- Operating temp -22°C to -10°C
- Supplied with 5 shelves per door
- Internal dimensions: 600 x 570 x 1550
- Manufacture code: CBP172/SL/AUS



Shown on legs, supplied on castors

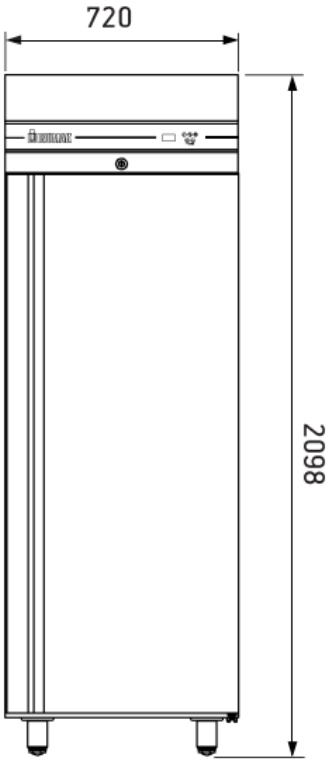


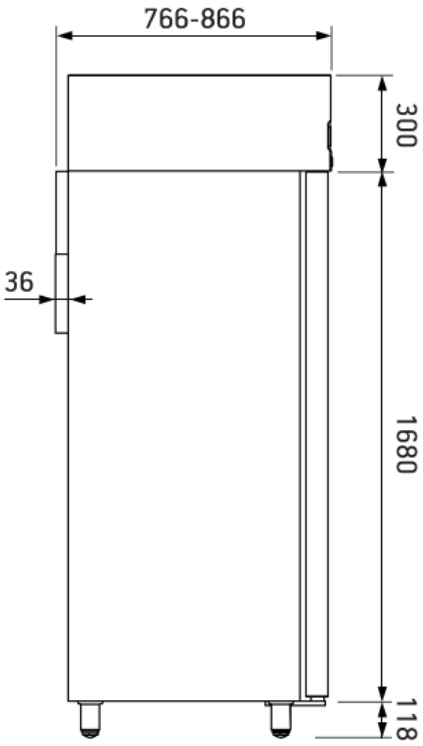

Castors will add 30mm to the height

Technicial Specifications
Power: 0.58kW
Voltage: 240V
Dimensions: 720 x 768 x 2115mm
Weight: 147kg
Origin: Greece

