CHEFS DEPOT
Culinary Supplies

INOMAK

UFI2170

Single Door Upright Freezer

- 654L
- European design and manufacture
- On castors
- Embedded controller
- Ambient temperature of 40˚C
- High quality AISI 304/18/8-10 stainless steel interior and exterior
- Internal corners rounded for ease of cleaning
- Self-closing door
- Reversible door
- R290 gas
- Gastronorm size – 2 x 1 size trays (lengthways)
- 22 x 2/1 x 65mm deep pans per door capacity
- Supplied with 5 shelves per door
- Internal usable space: 550 x 660 x 1250mm
- Manufacture code: CBP172/AUS



Shown on legs,
supplied on castors

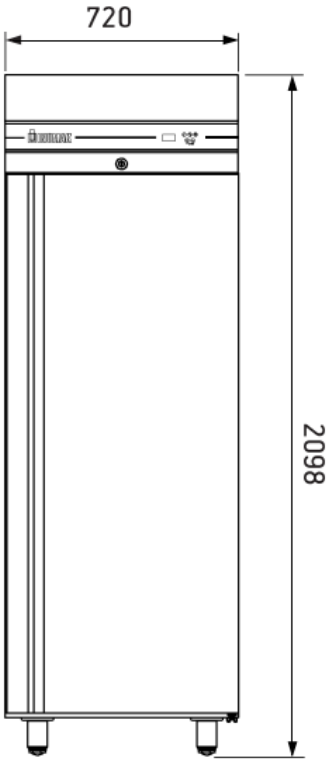

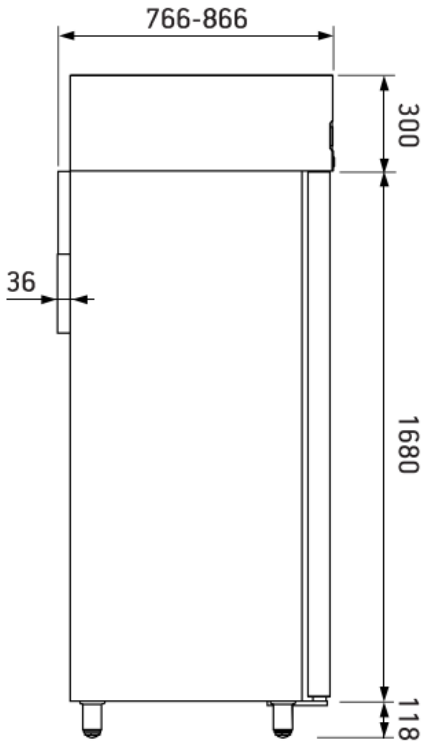

Castors will add
30mm to the height

<u>Technicial Specifications</u>
Power: 0.58kW
Voltage: 240V
Dimensions: 720 x 870 x 2115mm
Weight: 147kg
Origin: Greece

