UFI1140
Double Door Upright Fridge

- 1432L
- European design and manufacture
- On castors
- Embedded controller
- Ambient temperature of 43˚C
- High quality AISI 304/18/8-10
- Stainless steel interior and exterior
- Internal corners rounded for ease of cleaning
- Self closing doors
- R290 gas
- Operating temperature -2˚C to 8˚C
- Gastronorm size – 2 x 1 size trays (lengthways)
- 22 x 2/1 x 65mm deep pans per door capacity
- Supplied with 5 shelves per door
- Internal usable space 550 x 660 x 1250mm per door
- Manufacture code: CEP2144/AUS



Shown on legs,
supplied on castors

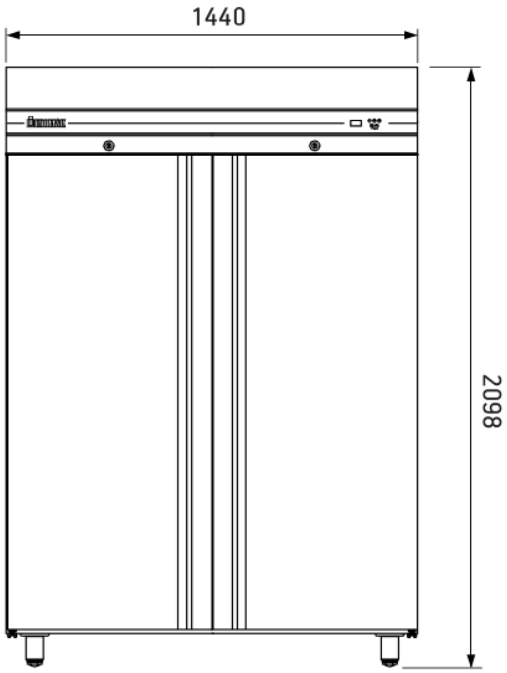

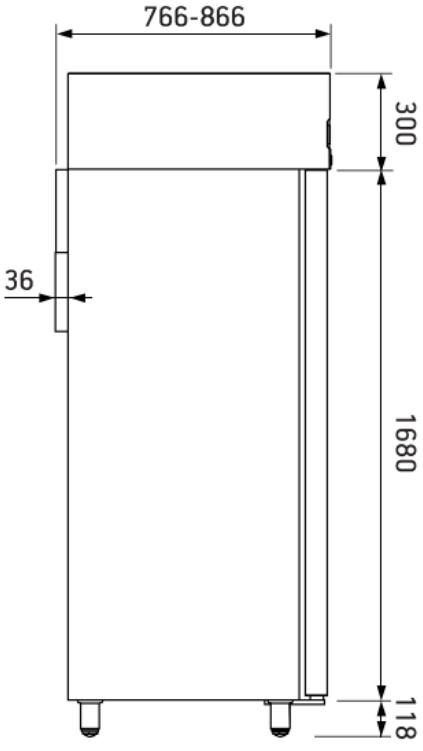

Castors will add
30mm to the height

<u>Technicial Specifications</u>
Power: 0.75kW
Voltage: 240V
Dimensions: 1440 x 870 x 2115mm
Weight: 224kg
Origin: Greece

