CHEFS DEPOT
Culinary Supplies

INOMAK

UFI1170SL
Slimline Single Door Upright Fridge

- 560L
- Stainless steel door
- European design and manufacture
- On castors
- Embedded controller
- Ambient temperature of 40°C
- Internal corners rounded for ease of cleaning
- Self-closing door
- Reversible doors
- R290 gas
- Operating temp -2°C to 8°C
- Supplied with 5 shelves per door
- Internal dimensions: 600 x 570 x 1550
- Manufacture code: CAP172/SL/AUS



Shown on legs, supplied on castors

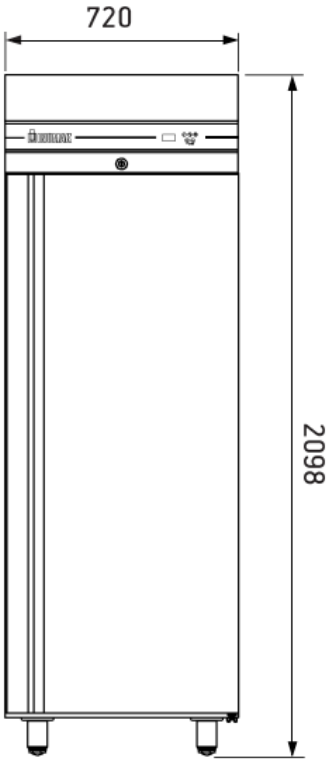

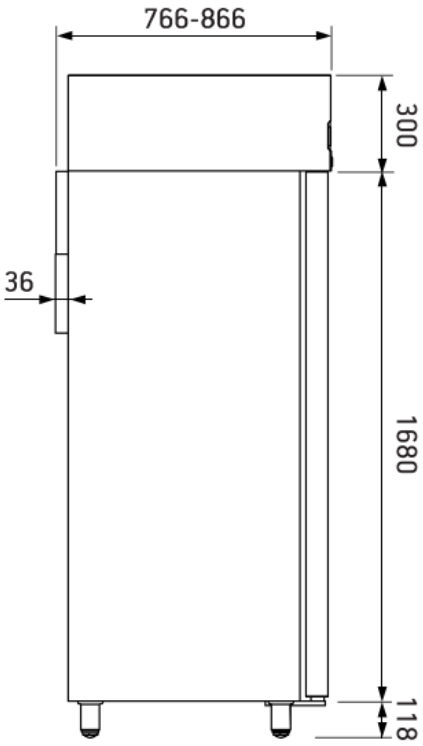

Castors will add 30mm to the height

Technicial Specifications
Power: 0.45kW
Voltage: 240V
Dimensions: 720 x 768 x 2115mm
Weight: 135kg
Origin: Greece

