SPGI.MS.CS.KOR.11

Combi Oven Stand - Kore/Mini-Touch

Product Information

- Combi oven stand to suit Giorik Kore/Mini-Touch 1/1 GN combi ovens, also suits other known brands
- Robust stainless steel construction (1.2mm) with silicone sealed seams and smooth, flat edges for easy cleaning
- Stainless steel tube legs (Ø38mm) with height adjustable stainless steel feet
- Stainless steel 1/1GN pan compatible, easily removable tray slides (lift up and pull out)
- Removable accessories tray for RO filter and chemical bottle storage
- Supplied flat packed ready for assembly
- 7 Pan capacity (1/1GN 65mm high) – GN pans not supplied



Specifications

Model	SPGI.MS.CS.KOR.11
W x D x H (mm)	520 x 670 x 800* * 637 x 670 x 800 (with accessories tray)
Weight	35kg
Load Capacity	7 x 1/1GN (65mm deep)

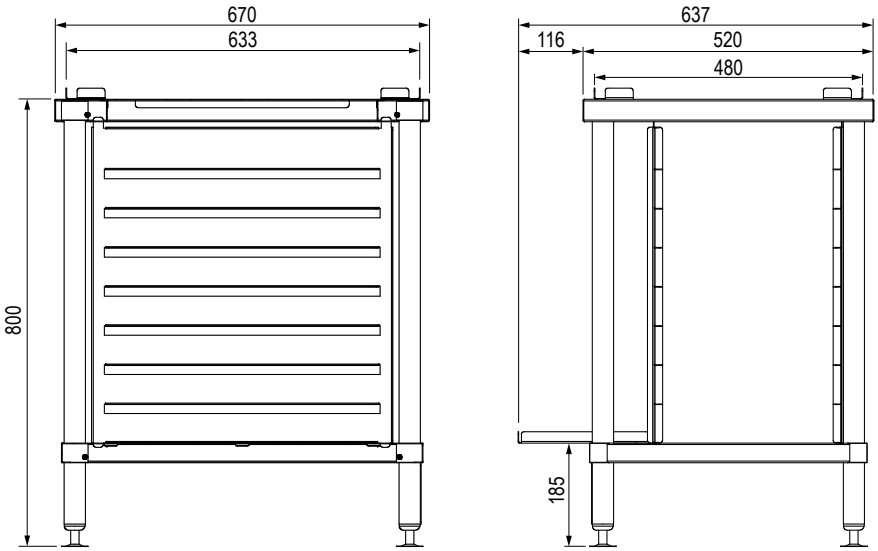

Revision: A - 05/11/2025 - 02

www.stoddart.com.au
www.stoddart.co.nz

Due to continuous product research and development,
the information contained herein is subject to change without notice.