UCG045A GOURMET SERIES UNDERCOUNTER

COAST ICE & COLD SOLUTIONS

CHEFS DEPOT Culinary Supplies



UCG045A

Features

- Produces clear, long-lasting gourmet cubes.
- Space-saving 387 mm wide under-counter design.
- Produces up to 20.5 kg of ice per day.
- Optional leg kit available.
- Constructed from sturdy, corrosion-resistant stainless steel and fingerprint-proof plastic.
- Ideal for any under-counter or bar application.
- Contemporary, elegant design.
- Environmentally friendly R134A refrigerant.
- Easily adjust the thickness of your ice from the front of the machine!

Space-Saving Solutions

- Front air discharge design for compact spaces.
- Low profile top saves counter space.
- Stores up to 8 kg of ice.
- Easy front access to ice.
- Removable Air Filter.

Options & Accessories

WATER FILTERS		
Ice Machine Model	Manifold	
	System	Replacement
UCG045	CD10B	CD100B

Ice Maker Warranty

Every Ice-O-Matic ice maker is backed by a warranty that provides both parts and labor coverage.

- Two years Parts and Labour

Ice Form



GOURMET ICE

GOURMET ICE DIMENSIONS	
Height	30.5 mm
Diameter	34.25 mm

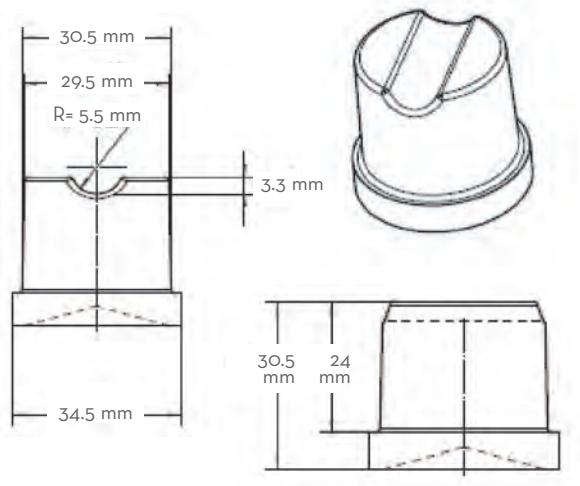

BPA FREE

UCG045A GOURMET SERIES UNDERCOUNTER

UCG045A GOURMET SERIES UNDERCOUNTER

COAST ICE & COLD SOLUTIONS

UCG045A GOURMET SERIES UNDERCOUNTER

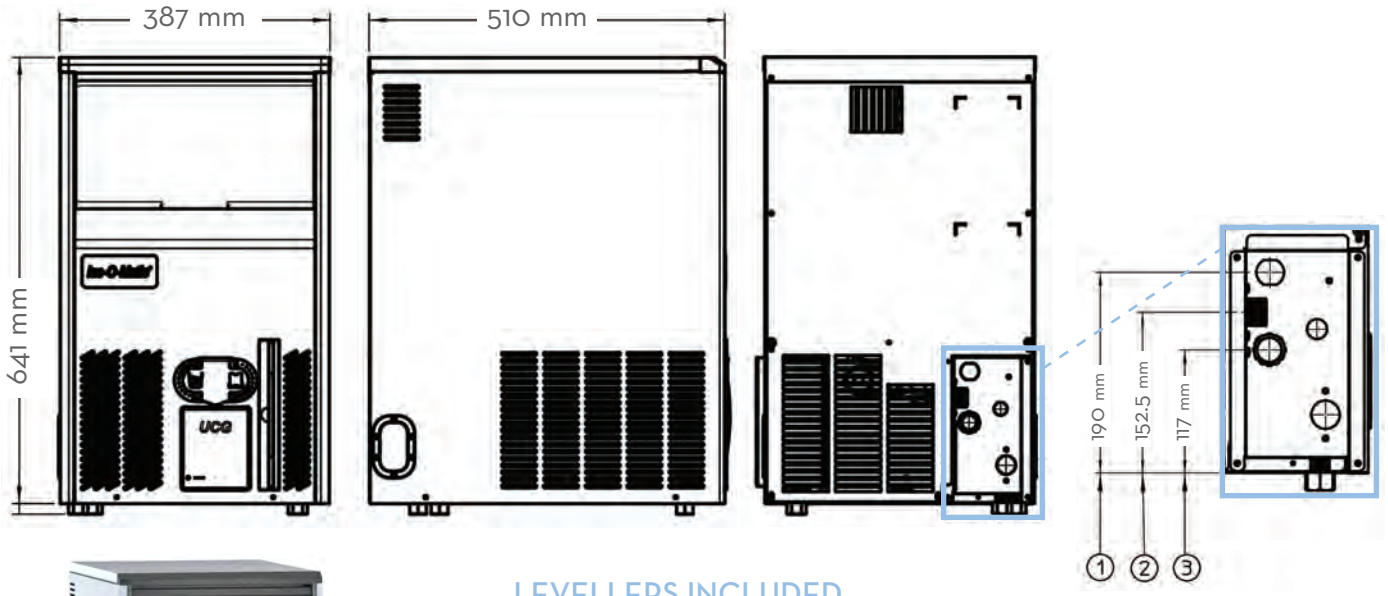



LEVELLERS INCLUDED

Do Not Extend – 15 mm

1 - Power Cord
2 - 19 mm Water Inlet
3 - 20 mm Water Drain

Operating Requirements

	MINIMUM	MAXIMUM
	50 Hz	
Ambient Temp. Range Air	10°C	43°C
Water Temp.	5°C	38°C
Water Pressure	1 BAR	5 BAR
Electrical Voltage	230V/50Hz/1ph	

Dimensions

ALL MODELS	
W x D x H (mm)	387 x 510 x 656 on levellers
Optional Leg Kit 150mm high	

Specifications

Model Number	Cond. Unit	Ice Production per 24hrs 21°C air/10°C water (kg)	Ice Production per 24hrs 32°C air/21°C water (kg)	Ice Production per 24hrs 10°C air/10°C water (kg)	Storage Capacity (kg)	Water Consumption (ltr/hr)	kWH Used per 45 kg of Ice @ 32°C air/ 21°C water	Voltage Characteristics
UCG045A	Air	20.5	18	25	8	3	17.8	230/50/1

NOTES:
Approx. Shipping Weight (kg): UCG045A (37)
Refrigerant Type: R134A

All specifications and performance data are subject to normal manufacturing variances.

Ice-O-Matic reserves the right to change the specifications at any time without obligation. Certifications may vary depending on country of origin.

Coast Distributors Pty Ltd
PO Box 288, Unanderra NSW 2526
Ph: (02) 9524 1234
E: sales@coastdistributors.com.au
www.coastdistributors.com.au

Rev: 01/21