MFI1255 - FLAKE ICE MAKER

CHEFS DEPOT Culinary Supplies

COAST Ice & Cold Solutions



MFI1255 ON CIB230

Features

- Only 21" (533 mm) wide.
- Produces up to 572 kg of ice per day.
- *SystemSafe* load monitoring system constantly checks workload on gearbox – shutting down system before a problem develops and preventing costly repairs.
- Water sensor eliminates low or no water failures and cannot be affected by adverse water conditions.
- Rugged stainless steel evaporator and auger ensures reliability.
- Industrial-grade roller bearings and heavy-duty gearbox provide years of trouble-free service.
- Made in U.S.A

Options & Accessories

WATER FILTERS		
Ice Machine Model	**Manifold**	
	System	Replacement
MFI1255	CD20B	CD200B

Ice Maker Warranty

Every Ice-O-Matic ice maker is backed by a warranty that provides both parts and labor coverage.

- Three years **Parts** and **Labor**.
- Five years **Parts** coverage on the compressor.

Ice Form

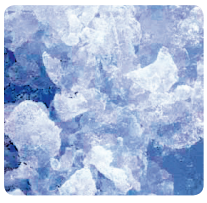

FLAKED ICE

Bin Chart

Kits for Combining Wider Bins with Smaller Models

	ICE STORAGE BINS						
Model No.	**B25** 110 kg 762 mm	**B40** 156 kg 762 mm	**B42** 160 kg 559 mm	**B55** 232 kg 762 mm	**CIB230** 232 kg 770 mm	**B100** 388 kg 1219 mm	**CIB400** 400 kg 1220 mm
MFI1255	Bin Adaptor Required						

MFI1255 - FLAKE ICE MAKER

COAST Ice & Cold Solutions

MFI1255 FLAKE ICE MAKER

Air Cooled

Please note: air-cooled units require 152 mm clearance for air intake and exhaust.

A. Ice maker potable water in, 3/8" FPT.
B. Drain, 3/4" FPT.
C. Hole for electrical connection.

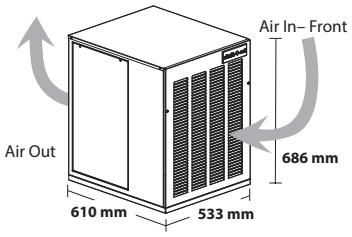

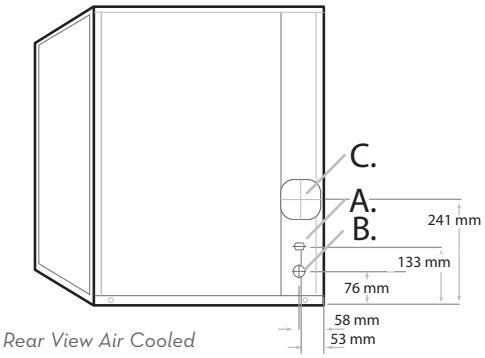

Rear View Air Cooled

Operating Requirements

	MINIMUM	MAXIMUM
		50Hz
Ambient Temp. Range Air	10˚C	43˚C
Water Temp.	4.4˚C	32˚C
Water Pressure	1.4 BAR	8.3 BAR

Dimensions

ALL MODELS	
W x D x H (mm)	533 x 610 x 686

Specifications

Model Number	Cond. Unit	Ice Production per 24hrs		Water Usage	kWH Used	Watts Used	Voltage Characteristics	Min. Circuit Ampacity	Fuse Size	Approx. BTUs per hour
		21°c air/ 10°c water kg	32°c air/ 21°c water kg	Litres per 45 kg of ice @ 32°c air / 21°c water	Per 45 kg of ice @ 32°c air / 21°c water	Per Hr @ 32°c air / 21°c water				
MFI1255	Air	572	408	45	3.25	1220	220-240/50/1	13.4	20	9,000

NOTES:
Number of Wires: 3 (including ground)
Approx. Shipping Weight kg: MFI1255A 98
Refrigerant Type: R452A

Coast Distributors Pty Ltd
PO Box 288, Unanderra, NSW 2526
Phone: (02) 9524 1234
sales@coastdistributors.com.au
www.coastdistributors.com.au

Rev: 04/16
Part: 7012