MODEL: **HyGenikx HGX-T-25-O**

HYGENIKX+



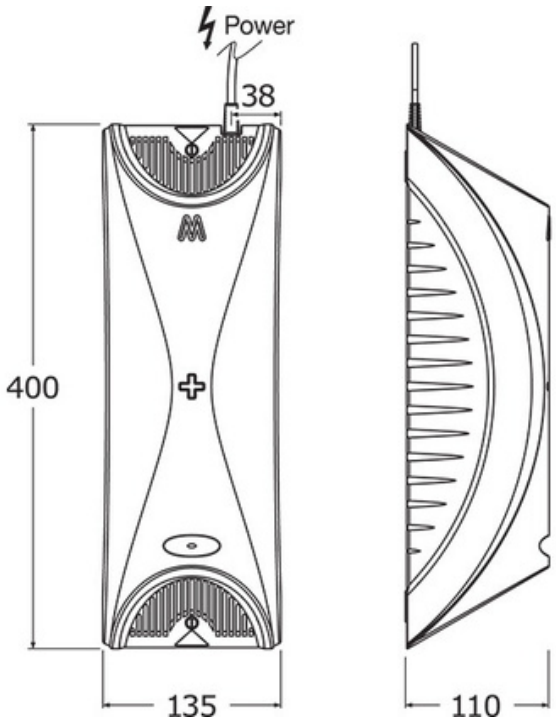

Dimensions are in millimeters.
If a Cad file is required please visit www.mechline.com.

HyGenikx 'O' range Air and Surface Sanitisation unit – designed for SMALLER occupied office areas, communal living spaces or dining areas. Covers 20-40m² areas which are constantly occupied and have low ventilation and air movement. Units can be used in multiples, covering a maximum area of 80m².

Area of Use: Smaller Occupied areas
Colour finish: Titanium
Lamp Type: WHITE (HGX-25-O)
Range of Cover: Up to 40m²

FEATURES & BENEFITS

- Uses proven UVC technology to improve air quality, extend shelf-life of fresh food, and control odours
- Targets and kills biological hazards, including Salmonella, Escherichia coli (E. coli), Norovirus and other primary sources of infections
- Laboratory tested and proven to eliminate harmful Listeria and remove up to 99.99% of viruses, including Coronavirus. For more information visit: https://www.mechline.com/hygenikx-testing
- Eliminates bacteria, viruses, moulds, fungi and volatile organic compounds (VOCs), both in the air and on exposed surfaces, even in the hardest to reach places
- Fully tested and environmentally compliant
- Low power consumption, 9-13W
- Easy to change lamp (and battery), requires no onsite engineer
- Power via a plug that allows flexible installation and easy connection to existing isolated socket or fused spur

TECHNICAL INFO

- Combines technologies: Germicidal Oxidation, Germicidal Irradiation, Dual waveband Plasma Quatro
- Lamp (and battery) requires replacement every 12 months to ensure peak efficiency
- Unit dimensions: 400 x 135 x 110mm
- Rated voltage: 230V
- Operating voltage: 220-230V
- Uninterrupted supply – 24 hour operation required. High level
- 1m (usable length) power cable with plug to be connected to suitably isolated socket or fused spur.
- EC declaration of conformity CE and UKCA mark
- Low Voltage Directive (LVD) 2014/35/EU
- Electromagnetic Compatibility Directive (EMC) 2014/30/EU
- Manufactured in accordance with European standards
- Produced under the control of our comprehensive BSI ISO
- 9001:2015 Quality Management System (certificate FS 616985)
- Class II certified for electrical insulation