moduline

item # .....

model # .....

project # .....

sis # .....

aia # .....



CHC282E

Cook & hold oven

CONSTRUCTION FEATURES

- Two separately controlled compartments with radiused corners
- Total thermic insulation with rock or glass wool
- Long lasting frontal seals made up of food grade of high heat resistance
- Static heating provided by low consumption wire heating element that coils up all the chamber
- Snap-shut door
- Mounted on four 150mm diameter castors, two of wich with brake
- All-around rubber bumpers
- Tightness cavity with radiuses corners, built-in drip tray and drainage system

FUNCTIONAL FEATURES

- Electronic control panel of temperature, time, core probe and Δt with LCD touch-screen
- Operating temperature 30°C ÷ 160°C
- End-of-cycle buzzer
- Chamber with safety thermostat
- Internal drain for easy cleaning
- Condensation drain tray
- Delayed start timer

STANDARD SUPPLY

- Multipoint core probe with the possibility to register 30 different temperatures and save them in the HACCP report (available only with USB port device)
- Glazed doors plus lighting
- Removable GN2/1 and GN1/1 tray racks

OPTIONS & ACCESSORIES

- ☐ USB port saving device HACCP
- ☐ Automatic door lock

MODULINESRL

Via dell'Industria 11, Z.I. San Giacomo di Veglia 31029 Vittorio Veneto (TV) - ITALY

tel. +39 0438 5063 - fax +39 0438 912 323 - info@moduline.it - www.moduline.it

02-2017

moduline

TECHNICAL INSTALLATION DIAGRAM

Electricity supply cable inlet

Chamber drain

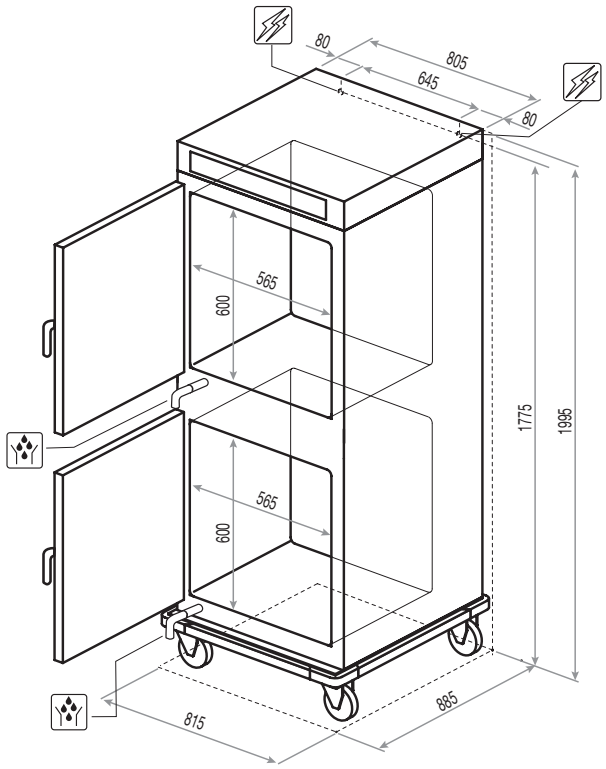

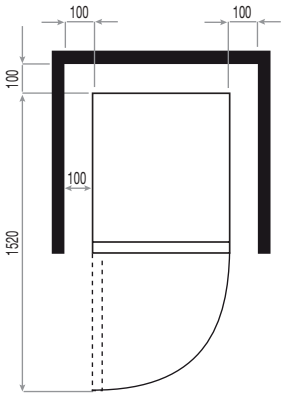

Overall dimensions (W x D x H) - mm	815 x 885 x 1995h	**Working temperature [°C]**	30÷160
Trays capacity (--) space between	8 + 8 x GN 2/1 16 + 16 x GN 1/1 (70)	**Containers capacity distance [mm]**	8 + 8 x GN 2/1 (70) 16 + 16 x GN 1/1 (70)
Power [kW]	3 +3	**Product max capacity [kg]**	55 + 55
Power supply	AC 230V 50 Hz		
Rated voltage [Vac]	230		
Total input [Kw]	3 + 3		
Amps. [A]	13 + 13		
Connecting wire min. section (type H07 RN-F) [mm²]	3 x 1,5		

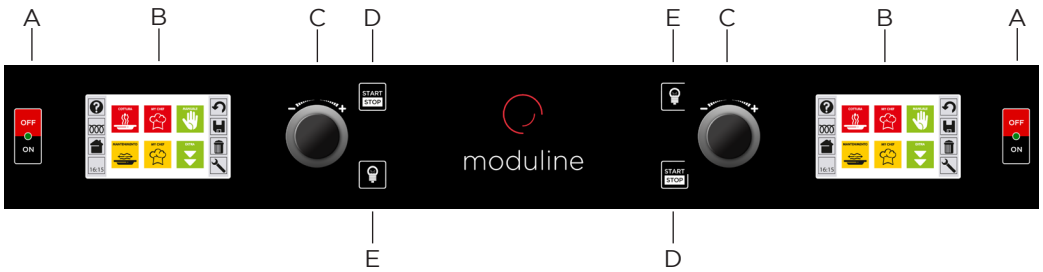

A ON/OFF switch
B Display Touch Screen
C Setting knob and select “ENTER”
D “START/STOP” button
E Chamber light button

MODULINESRL
Via dell’Industria 11, Z.I. San Giacomo di Veglia 31029 Vittorio Veneto (TV) - ITALY
tel. +39 0438 5063 - fax +39 0438 912 323 - info@moduline.it - www.moduline.it

02-2017