CHEFS DEPOT
Culinary Supplies



HLF 1700

HLF 1700 STANDARD CONFIGURATION

350g Hopper
Drip Tray 1.2L
Grounds Drawer 18
350g Soluble Canister

Rated Power
230vac - 50/60 Hz -
1750w - 10amp plug
Total Weight - 30kg

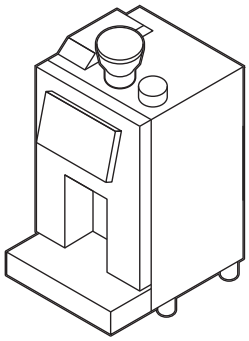

DIMENSIONS

1 Footprint

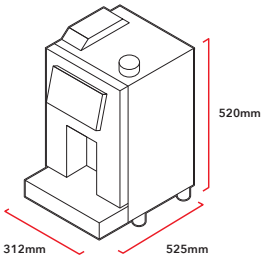

2 350g Hopper

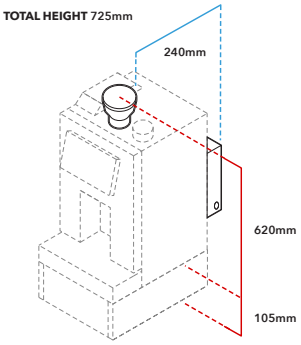

3 600g Hopper

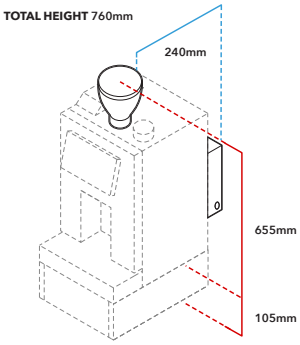

OPTIONAL

3 1Kg Hopper

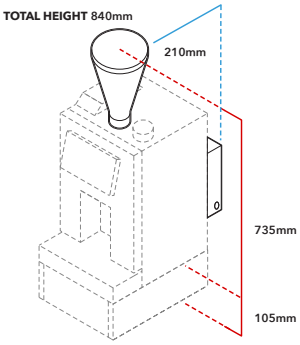

OPTIONAL

WASTE

1 Mains

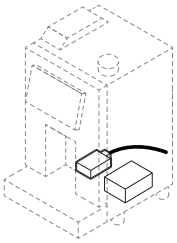

Mains waste
External grounds outlet

2 Drip tray

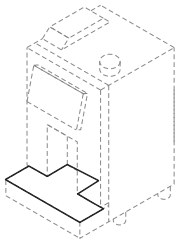

1.2L (14 Milk Selections)
Grounds Draw - 18

3 Single draw

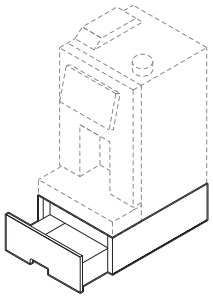

120 Coffee Dredges

OPTIONAL

4 Two draws

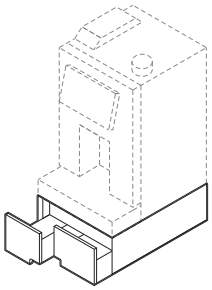

3L (30 Milk Selections)
45 Coffee Dredges

OPTIONAL

WATER

Mains

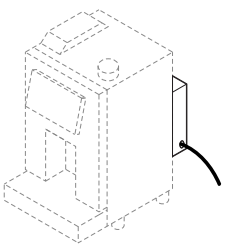

Submersible Pump

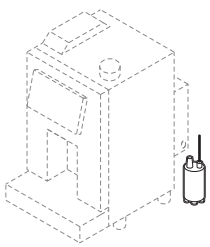

PAYMENT

Coin Accepter with Box

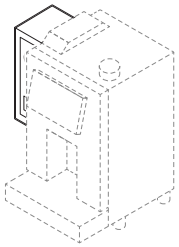

OPTIONAL

Credit Card System

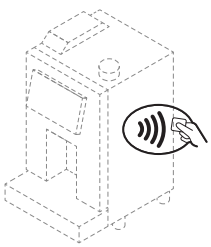

OPTIONAL

HLF 1700

The HLF 1700 suits a variety of commercial spaces and is optioned to suit teams that require anywhere from a few to over a hundred cups per day.

OVERVIEW

Up to 100+ Cups a day Capacity

Innovative 8" touch screen able to display 4-10 Beverage sections with up to 3 different cup sizes. Able to upload promotional images and videos.

Wifi Capabilities enabling Telemetry and HLF Remote Control System which allows full control of the machine remotely to perform resets, software upgrades, beverage adjustments, uploading videos and images and viewing fault logs, selection counts and cleaning cycles.

Pro Milk System producing the ultimate sweet and silky smooth microfilmed milk. Offering complete adjustment for each beverage temperature, texture and aeration.

Single soluble canister (E.g Chocolate, Chai or Hazelnut)

Variable chamber brew unit 7-16 grams of coffee

High performance grinder with 63mm flat burrs

1ltr Stainless steel boiler

Adjustable dispensing head

One year parts only warranty













DISTRIBUTED BY