CHEFS DEPOT
Culinary Supplies

MAXIDROP
TWIST – MAXX – EVO

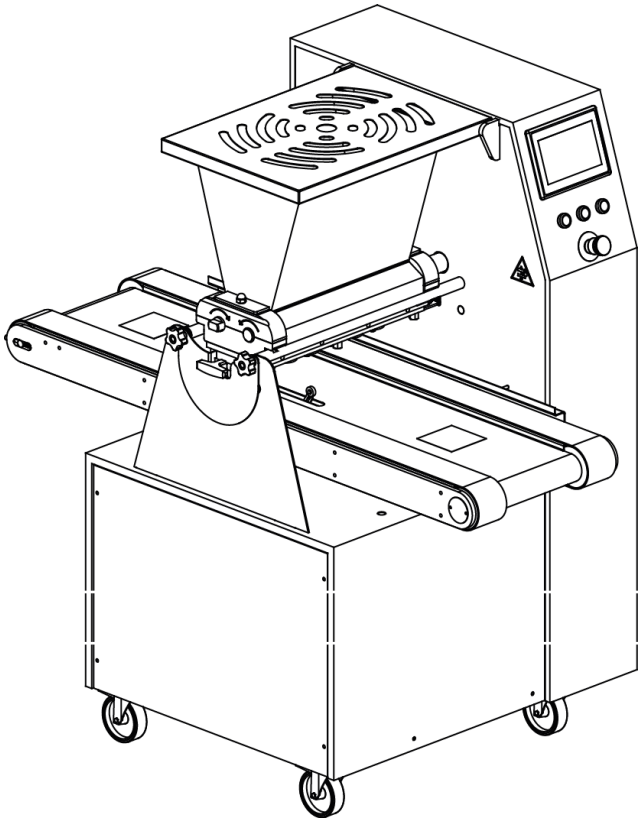

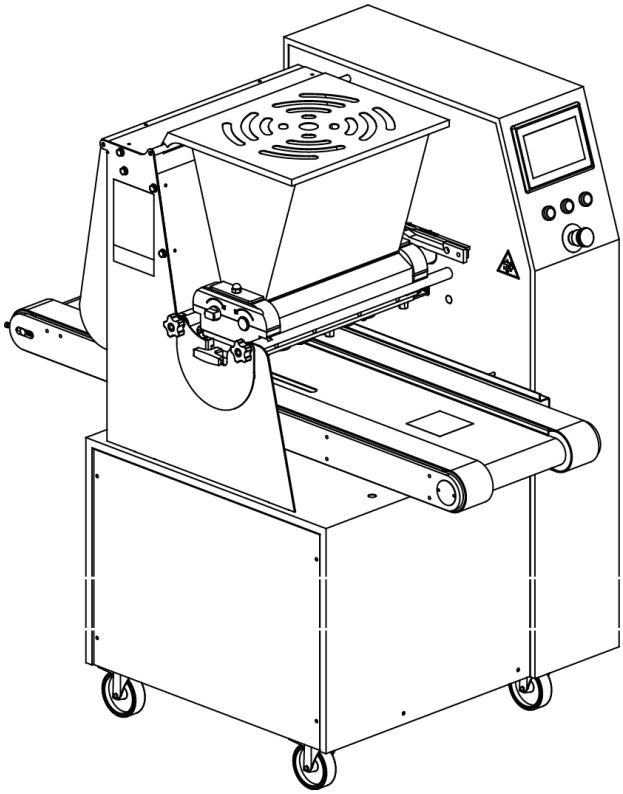

ENGLISH

USE AND MAINTENANCE MANUAL

MIMAC
PART OF TP FOOD GROUP

S/N: _____
Date: _____
Rev.: R2

INDEX

1. INTRODUCTION 5
1.1. OWNERSHIP OF THE MANUAL 5
1.2. PURPOSE OF THE MANUAL 5
1.3. VALIDITY OF THE MANUAL 5
1.4. SYMBOLISM 5
1.5. IMPORTANCE OF THE MANUAL 5
1.6. INTENDED AUDIENCE 5
1.7. PRESERVATION OF THE MANUAL 5

2. PRELIMINARY INFORMATION 6
2.1. MANUFACTURER DETAILS 6
2.2. CUSTOMER SERVICE 6
2.3. EC STANDARDS COMPLIANCE DECLARATION 6
2.4. NORMATIVE REFERENCES 6
2.5. GUARANTEE 6
2.6. SOFTWARE OWNERSHIP 6
2.7. PREPARATION OF THE WORK PLACES 7
2.8. RECEIVING THE MACHINE 7
2.8.1. PACKAGING 7
2.8.2. LIFTING AND HANDLING 7
2.8.3. UNPACKING 7
2.9. USERS TRAINING 8
2.10. TERMS OF USE 8
2.11. INTENDED USE 8
2.12. NOISE WARNINGS 9
2.13. CLOTHING 9

3. SAFETY 10
3.1. GENERAL INFORMATION 10
3.2. DESCRIPTION OF PICTOGRAMS 10
3.3. DESCRIPTION OF SAFETY DEVICES 11
3.3.1. FIXED GUARDS 11
3.3.2. MOVABLE GUARDS 11
3.4. PLACEMENT OF SECURITY DEVICES AND SIGNALS 11
3.4.1. MAXIDROP TWIST / MAXIDROP TWIST EVO 11
3.4.2. MAXIDROP MAXX / MAXIDROP MAXX EVO 12
3.5. RESIDUAL RISKS 12

4. MACHINE DESCRIPTION 13
4.1. GENERAL DESCRIPTION 13
4.2. IDENTIFICATION 13
4.3. TECHNICAL SPECIFICATIONS 13
4.3.1. MAXIDROP TWIST / MAXIDROP TWIST EVO 13
4.3.2. MAXIDROP MAXX / MAXIDROP MAXX EVO 14

4.4. MAIN COMPONENTS 15
4.5. EQUIPMENT 15
4.6. WORKING AREAS 16
4.6.1. MAXIDROP TWIST / MAXIDROP TWIST EVO 16
4.6.2. MAXIDROP MAXX / MAXIDROP MAXX EVO 16
4.7. PRODUCTS OVERVIEW 17

5. START-UP AND OPERATION CHECKS 18
5.1. POSITIONING 18
5.2. ELECTRICAL CONNECTION TO POWER SUPPLY AND EARTH 18
5.3. CONTROL DESCRIPTION 18
5.3.1. CONTROL PANEL 18
5.3.2. MAIN SWITCH 19
5.3.3. TOUCH SCREEN PANEL 19
5.4. PRELIMINARY OPERATIONS 20
5.4.1. INSERTING THE ROLLER TYPE DOSING UNIT 20
5.4.2. INSERTING THE PUMP TYPE DOSING UNIT 21
5.4.3. INSERTING THE MOULD 22
5.4.4. INSERTING AND ADJUSTING THE WIRE CUTTING SYSTEM 22
5.4.5. INSERTING/REPLACING THE STEEL WIRE 24
5.5. CHECKING THE SAFETY DEVICES 26
5.5.1. MAXIDROP TWIST / MAXIDROP TWIST EVO 26
5.5.2. MAXIDROP MAXX / MAXIDROP MAXX EVO 27

6. MACHINE USE 28
6.1. SELECTING A PROGRAM 28
6.2. CREATING/MODIFYING A PROGRAM 28
6.3. PARAMETERS' MENU 29
6.4. DESCRIPTION OF PRODUCT PARAMETERS 30
6.4.1. DOSAGE PARAMETERS 31
6.4.2. NOZZLES ROTATION PARAMETERS 34
6.4.3. WIRE-CUTTING PARAMETERS 36
6.4.4. TRAY ADVANCE PARAMETERS 36
6.4.5. LIFTING PARAMETERS 38
6.5. COPYING A PROGRAM 39
6.6. MODIFYING PARAMETERS DURING OPERATION 39
6.7. PROTECTING PROGRAMS WITH A PASSWORD 40
6.8. PROGRAM BACKUP/RESTORE 41
6.8.1 BACKUP 41
6.8.2 RESTORE 41
6.9. WARNINGS ON PROGRAMMING 42
6.10. STARTING PRODUCTION 43
6.10.1. PLACE THE DOUGH IN THE HOPPER 43
6.10.2. PRESSURIZING THE SYSTEM 43
6.11. KEY TO MANUAL CONTROL ICONS 44
6.11.1. DOSING CONTROL ICONS 44
6.11.2. NOZZLES ROTATION CONTROL ICONS 44
6.11.3. WIRE-CUTTING CONTROL ICONS 45

6.11.4. TRAY ADVANCE CONTROL ICONS *45*
6.11.5. LIFTING CONTROL ICONS *46*
6.12. MACHINE STOPPING DURING AN EMERGENCY 46

7. SETUP AND DIAGNOSIS 47
7.1. MACHINE PARAMETERS 47
7.1.1. LANGUAGE SETTING *47*
7.1.2. DESCRIPTION OF THE MACHINE PARAMETERS *47*
7.2. DIAGNOSTICS SCREEN 51
7.2.1. PLC'S INPUTS AND OUTPUTS *52*
7.2.2. DOSING MOTOR *52*
7.2.3. CONVEYOR ADVANCE MOTOR *53*
7.2.4. LIFTING MOTOR *54*
7.2.5. NOZZLES ROTATION MOTOR *55*
7.2.6. WIRE-CUTTING MOTOR *56*
7.3. ALARMS AND SIGNALS 57
7.3.1. TABLE OVERTRAVEL ALARM: RESETTING INSTRUCTIONS *60*

8. CLEANING 61
8.1. GENERAL INFORMATION 61
8.1.1. FOOD HYGIENE REQUIREMENTS *61*
8.1.2. CLEANING OF PARTS WHICH DO NOT COME INTO CONTACT WITH FOOD *61*
8.1.3. CLEANING OF PARTS WHICH COME INTO CONTACT WITH FOOD *61*
8.2. STATIONARY MOULD DISASSEMBLING AND CLEANING 62
8.3. ROTARY MOULD DISASSEMBLING AND CLEANING 62
8.4. ROLLER TYPE DOSING UNIT DISASSEMBLING AND CLEANING 63
8.5. PUMP TYPE DOSING UNIT DISASSEMBLING AND CLEANING 64

9. MAINTENANCE 65
9.1. GENERAL INFORMATION 65
9.2. SUBJECT TO WEAR PARTS 65
9.3. STANDARD MAINTENANCE 65
9.4. SPECIAL MAINTENANCE 65
9.5. MAINTENANCE OF ELECTRICAL AND ELECTRONIC DEVICES 65
9.6. SPARE PARTS REQUEST 65
9.7. STORAGE 65
9.8. DISMANTLING AND DISPOSAL 66

1. INTRODUCTION

1.1. OWNERSHIP OF THE MANUAL

This manual belongs exclusively to MIMAC ITALIA SRL Unipersonale.
Reproduction, even partial, is forbidden unless authorized by the Manufacturer.

1.2. PURPOSE OF THE MANUAL

The aim of this manual is to provide information necessary for the correct and safe use of the machine and for carrying out operation as contemplated in the design phase.

1.3. VALIDITY OF THE MANUAL

This manual reflects the machine state of the art at the time it is placed on the market.
The Manufacturer reserves the right to make changes to the machine at any time and without notice.
Any integration sent by the Manufacturer to users must be kept together with the manual and becomes an integral part of it.

1.4. SYMBOLISM


Useful information


Important communications regarding safety and caution when carrying out operations


Presence of risks and danger for health and safety


DPI use abligation


Notice regarding machine disposal and packaging elimination

1.5. IMPORTANCE OF THE MANUAL

This manual must be read before starting any operation. Good machine operation is guaranteed if all instructions contained in this manual are applied correctly.
The machine must not be used and no intervention must be carried out on it before having read this manual carefully and understood all its content.
It is also forbidden to use the machine for purposes other than those indicated, or to neglect operations that are necessary for safety.

1.6. INTENDED AUDIENCE

- Accident prevention and safety manager
- Operators in charge of transporting the machine
- Operators in charge of connection to the power source
- Operators in charge of testing the machine
- Operators in charge of the training
- Machine operators
- Operators in charge of maintenance
- Operators in charge of machine disposal

1.7. PRESERVATION OF THE MANUAL

The manual must be kept in good condition and in a suitable place that is known to all machine users.
If the manual is lost, deteriorated or if additional copies are necessary, please contact the Manufacturer directly.
The manual must be kept until the machine is disposed of.
If the machine is sold, the manual must be delivered to the new owner together with the EC standards conformity declaration and all other attachments.

2. PRELIMINARY INFORMATION

2.1. MANUFACTURER DETAILS

MIMAC ITALIA S.R.L. Unipersonale
Via dell'Industria, 22
36013 Piovene Rocchette (VI)
ITALIA
Tel.: +39 0445 576250
Fax: +39 0445 576112
E-mail: info@mimac.com

2.2. CUSTOMER SERVICE

Machine assistance is supplied by the Manufacturer or the authorized Retailer.
Please contact the Manufacturer or the authorized Retailer for any request and refer to the indications printed on the information plate of the machine.

2.3. EC STANDARDS COMPLIANCE DECLARATION

The machine indicated in the manual is manufactured in compliance with the relevant Community Directives that were in force when the machine was placed on the market. As the machine is not included in Annex IV of the 2006/42/EC Machinery Directive, the Manufacturer has supplied self-certification for placing the “EC” marking according to the reference directives.

2.4. NORMATIVE REFERENCES

- Machinery Directive 2006/42/EC
- Low Voltage Directive 2014/35/UE
- Electromagnetic Compatibility Directive 2014/30/UE
- UNI EN ISO 12100:2010 - Safety of machinery - General principles for design - Risk assessment and risk reduction.
- UNI EN ISO 13850:2015 - Safety of machinery - Emergency stop - Principles of design.
- UNI EN 1088:2008 - Safety of machinery - Interlocking devices associated with guards - Principles for design and selection.
- CEI EN 60204-1 - Safety of machinery. “Electrical equipment of machines”.
- Regulation (CE) N. 1935/2004 of 27 October 2004.

2.5. GUARANTEE

The machine is guaranteed for 12 months. The guarantee only covers those parts that present production faults and excludes the electric installation and the motors. The indicated period is valid for a machine that works eight hours a day and must be halved for heavier-duty conditions.
During the guarantee period the Manufacturer shall supply, free of charge, within the minimum technical periods, and on Ex-Works terms, the parts or items that have evident manufacturing faults, and only under the condition that the machine was used following the regulations established by the Manufacturer (installation, use, maintenance and performance limits).
Items not manufactured by MIMAC ITALIA are excluded from the guarantee, for example motors and electrical apparatus, cylinders and pneumatic components, as well as all material not directly guaranteed by its own manufacturer. In addition, all parts damaged during the transport, or because of bad and/or incorrect installation or maintenance, or because of neglect or incorrect use, are not covered by the guarantee.
If the faulty parts are repaired or replaced in the premises of the customer, he will be charged with the cost of travelling, board and lodging and of the working hours of the technicians sent to repair or replace the parts. The hourly cost shall be quantified according to the Anima (Federation of the Italian Association of Mechanical and Engineering Industries) tables in force at the moment of the intervention.
If in the unquestionable opinion of our technicians it is not possible to intervene in the customer’s premises, the customer shall send the machine on DDP terms to MIMAC ITALIA who, after repairing the faulty part at no charge, shall return the machine on ex works terms.
When the previously indicated guarantee period has expired, the customer will be also charged with both the cost of the replaced parts and the cost of the labour.
The guarantee is valid only for the original purchaser; machine replacement is never foreseen.
The guarantee becomes null and void when the machine has been tampered with, or modified and/or repaired by people who have not been expressly authorized by MIMAC ITALIA.

2.6. SOFTWARE OWNERSHIP

The implemented software, which runs machine operations, belongs to MIMAC ITALIA having its legal head office in Via dell'Industria, 22 - Piovene Rocchette (VI) - ITALY.
The Customer is licensed to use the software in compliance with the instructions in this manual.

The software cannot be altered, modified, copied and/or reproduced without written authorisation from MIMAC ITALIA. Being the owner of the software used to run its machines, MIMAC ITALIA will not grant the source codes of its software for any reason and will persecute anyone or anything that copies, reproduces, decodes or modifies the same software.

2.7. PREPARATION OF THE WORK PLACES

Unless otherwise indicated in the contract, the following must be carried out by the Customer:

- preparation of the areas, including any building works and/or piping and conduit that are required;
- the power supply for the machine, in compliance with the laws in force in the user's country.

The installation area of the machine, being meant for production of oven-baked products, must have:

- openings that allow the bulkiest parts of the machine to pass;
- construction features complying with the current standards;
- an electric system complying with the current standards; special care must be taken with the earthing system and the main panel, which must have relative protection devices against overloads and short circuits. The nominal power installed on the machine is indicated on the identification plate.

The complete electric system must be realized and kept periodically under control by professionally trained technicians who can accompany each intervention with a declaration of conformity to "the rules of the trade".

2.8. RECEIVING THE MACHINE



The Manufacturer is not liable for any accident, damage or machine fault that may occur if the indications that follow are not observed.

Make sure no damage occurred during transport and that the packaging is whole. If this is not the case, inform the shipping agent and write "Accepted with a reservation" on the shipping document.
If any damage is caused during transport, the shipping company must be informed by the Customer, in writing within 8 days from receipt of the goods. Inform the Manufacturer immediately if serious damage has occurred.
Make sure the goods correspond to the items listed in the shipping document. Inform the Manufacturer immediately if pieces are missing.

2.8.1. PACKAGING

The machine and its accessories can be delivered:

- without packaging, fixed to the loading surface, only protected by an outer film to prevent scratches;
- by container or in palletized wooden crates.

If transported by sea, the machine is inserted inside a sealed wrapping to protect it from atmospheric agents.

2.8.2. LIFTING AND HANDLING



All operations must be carried out by people who have been authorised and under the supervision of a person in charge.



Operators must wear all the personal protection equipment necessary for the operations to be carried out safely and must use suitable tools.

Before starting operations, identify and make sure there are no danger points in the movement area, including the area where the means of transport is positioned and the installation area.
The transport and lifting means must be suitable for the weight to be lifted. Concerning this, read the weights printed on the packaging and/or indicated in this manual.
Inspect the cables before using them to make sure there is no damage or signs of wear. Do not twist or knot the cables and follow the Manufacturer's instructions; these instructions are valid also for chains or belts.
Be careful when positioning the lifting or slinging systems; make sure the load is perfectly balanced before lifting it.
It is forbidden to get onto the load, or to move and/or remain under it while it is being moved.
It is forbidden, for those people who are not involved in transporting and moving, to access the relative areas.
All operators must remain at a safety distance from the packages when they are lifted from the ground to avoid being hit if they fall.
Do not allow the load to oscillate during lifting.
Lift the machine using a fork-lift, inserting the forks under the lower surface at the barycentre point
Position the machine on a solid and even floor/worktop.

2.8.3. UNPACKING

When installation has been completed, all the packaging material must be disposed of in compliance with the national regulations in force.
The equipment and material used for lifting should be positioned in a suitable place and stored carefully for possible machine transfer.

2.9. USERS TRAINING

The machine was designed and manufactured for professional use. Those who use the machine must be trained in order to become familiar with:

- all the functions of the control panel;
- all the installed protection guards and safety systems;
- commissioning and putting out of service;
- the possible work cycles;
- the various machine stopping devices, including the emergency stops;
- loading the material to be processed;
- unloading the processed material;
- the contents of this Manual;
- the checks to be carried out periodically;
- all the routine maintenance operations.

Operators must also avoid doing anything on their own initiative; they do not have to carry out any interventions that are outside their competence and technical knowledge

If something wrong occurs the operators have to:

- intervene immediately and stop the machine, using the emergency push-button;
- immediately inform their supervisor, and request his timely presence.

When the training phase is completed, operators must undergo an evaluation test on their acquired level of awareness. The training phase and the result of the aptitude test must be documented within the company.



The machine must not be used by people who have not been declared legally suitable for handling food products.

2.10. TERMS OF USE

Permitted environmental values for good machine operation:

- temperature from +5 °C to +40 °C with an average not exceeding 35 °C for over 24 hours;
- relative humidity between 30% and 95% (without condensation);
- absence of ionising and non-ionising radiation.

The environment around the machine must be kept clean. Remove the plug from the mains before moving the machine for cleaning.

The workplace lightning must:

- guarantee good visibility at every point;
- not create dangerous reflections;
- allow for the control panel and the emergency push-buttons to be read clearly.

2.11. INTENDED USE

MIMAC ITALIA is not liable for any injury caused to people or damage to things arising from any unauthorised changes made to the original operation software granted in use to the Customer.

It is forbidden to use the machine in conditions or for purposes other than those indicated in the manual and MIMAC ITALIA cannot be held responsible for faults or accidents caused by the non-observance of this rule.

Do not use the machine if the safety devices have been tampered with: before starting to work, the operator must make sure that the safety devices, such as the emergency push-button and the micro-switches connected to the mobile guards, are working correctly.

Do not hit the safety guards or place weights on them: even though the machine has solid guards, these are not suitable for holding heavy weights or being hit hard.

Machine must not be used by unskilled users: this manual must be read carefully before starting to work with the machine.

Do not direct jets of water directly towards the machine, especially towards the guards and the electrical and electronic parts, while washing the machine and the workplace.

The Manufacturer is not liable for damage if one of the following conditions occurs:

- incorrect installation;
- power supply faults;
- failure to comply with the instructions;
- incorrect machine use or machine used by unskilled users;
- using the machine in a manner that is not indicated in national regulations;
- negligent maintenance operations;
- unauthorised modifications or interventions;
- using spare parts that are not original or not specific for the model.

To guarantee maximum working reliability, MIMAC ITALIA has accurately chosen the materials and components used to produce the apparatus, which was accurately tested before delivery. Good machine performance over time also depends on correct use and suitable maintenance in line with the instructions given in this manual.

2.12. NOISE WARNINGS

The dropping machine does not exceed an equivalent continuous noise level of 85 dB(A).

Considerations in compliance with Directive 2006/42/CE P.1.7.4.f
No special precaution must be taken by the operator.
The indicated noise level is an emission level and does not necessarily represent a safe working level.
There is a link between the emission and exposure levels, but it cannot be used to determine if special precautions are necessary. Factors that influence the true level of exposure of the work force include the characteristics of the working environment, the other sources of noise, etc., for example the number of machines and the other processes close by. In addition, the permitted exposure level can vary from one country to another. This information allows the machine user to evaluate the danger and risks in a better manner.
The machine user and the employer must respect laws regarding operator protection against the daily personal exposure to noise, with the possible use of personal protection equipment (earmuffs, etc.) according to the total noise level present in the work area.

2.13. CLOTHING

As far as clothing is concerned, operators must adhere to food production standards that are current in the European community and/or in their own Country.
In a simple manner, it is obligatory to:

- wear clothing complying with the health regulations (overalls and headgear that cover hair completely);
- wear disposable sterilized gloves;
- wear accident-prevention footwear that is suitable for the movements to be carried out;
- wear disposable masks that cover the mouth and nose.

3. SAFETY

3.1. GENERAL INFORMATION

The machine was designed to work safely. All commands are given using a touchscreen panel and the push-button present on the control panel.
The emergency push-button inhibits all machine functions; to reset them release the emergency push-button and press the re-establishment push-button. No component will start moving before the emergency push-button is released.
The stability of the whole machine is sufficient to guarantee use in the indicated operating conditions without risks of overturning, falling or moving unexpectedly.
Do not tamper with or eliminate the safety devices that are installed on the machine.
Periodically check the effectiveness of the safety systems.
Do not damage or eliminate the safety signals that are applied to the machine; if a safety signal is damaged or missing, immediately inform the person in charge of company safety and ask for its replacement.
If operators tamper with the safety devices, the Manufacturer is not liable for any resulting injury to people or damage to things. The operator becomes the only person responsible when facing competent bodies.
If danger arises for people or things, press the emergency push-button.

3.2. DESCRIPTION OF PICTOGRAMS



ATTENTION! Machine moving parts in action

BE CAREFUL to your hands

DO NOT remove safety devices

DO NOT clean, grease or adjust the machine elements while they are in action

DO NOT clean the machine using water jets



ATTENTION! Hand crush hazard

3.3. DESCRIPTION OF SAFETY DEVICES

3.3.1. FIXED GUARDS

They are fixed with screws and can be removed only using the appropriate tools, which must only be used for maintenance operations; when maintenance is finished the guards must be correctly repositioned.

3.3.2. MOVABLE GUARDS

They are connected to safety micro-switches or photocells meant for cutting in automatically whenever the covers are opened. The machine can start production again when the movable guards are closed.

3.4. PLACEMENT OF SECURITY DEVICES AND SIGNALS

3.4.1. MAXIDROP TWIST / MAXIDROP TWIST EVO

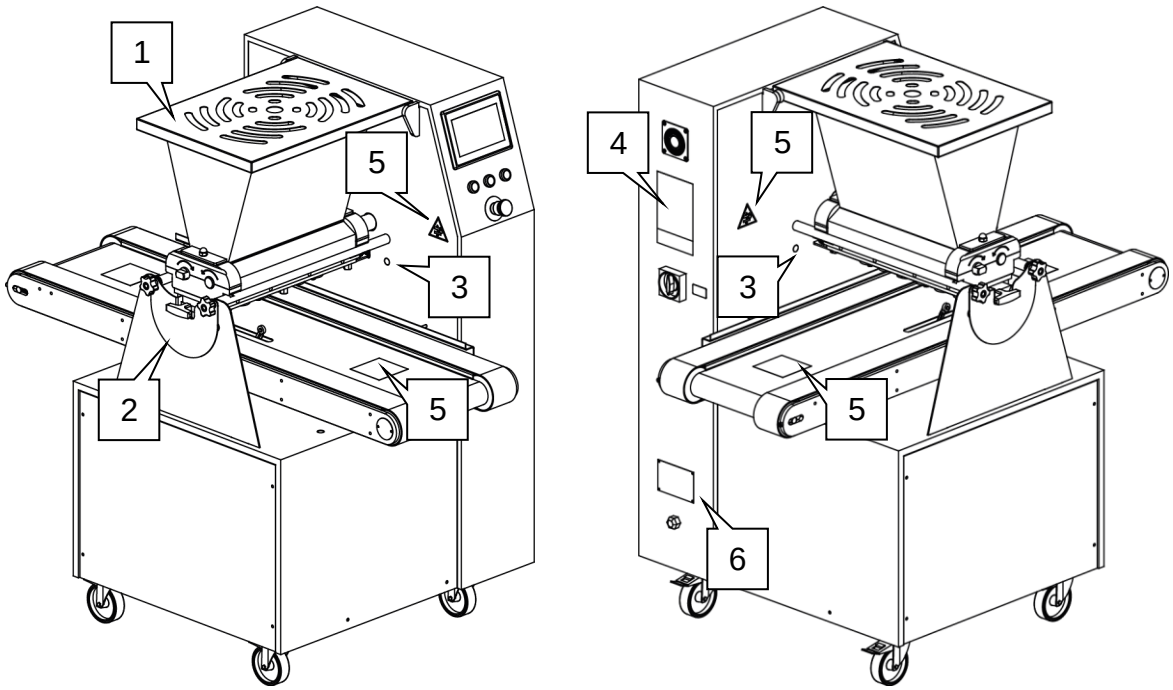

1. Hopper movable guard
2. Front guard
3. Photocell
4. Main pictogram
5. Pictogram “Hand crush hazard”
6. Information plate

3.4.2. MAXIDROP MAXX / MAXIDROP MAXX EVO

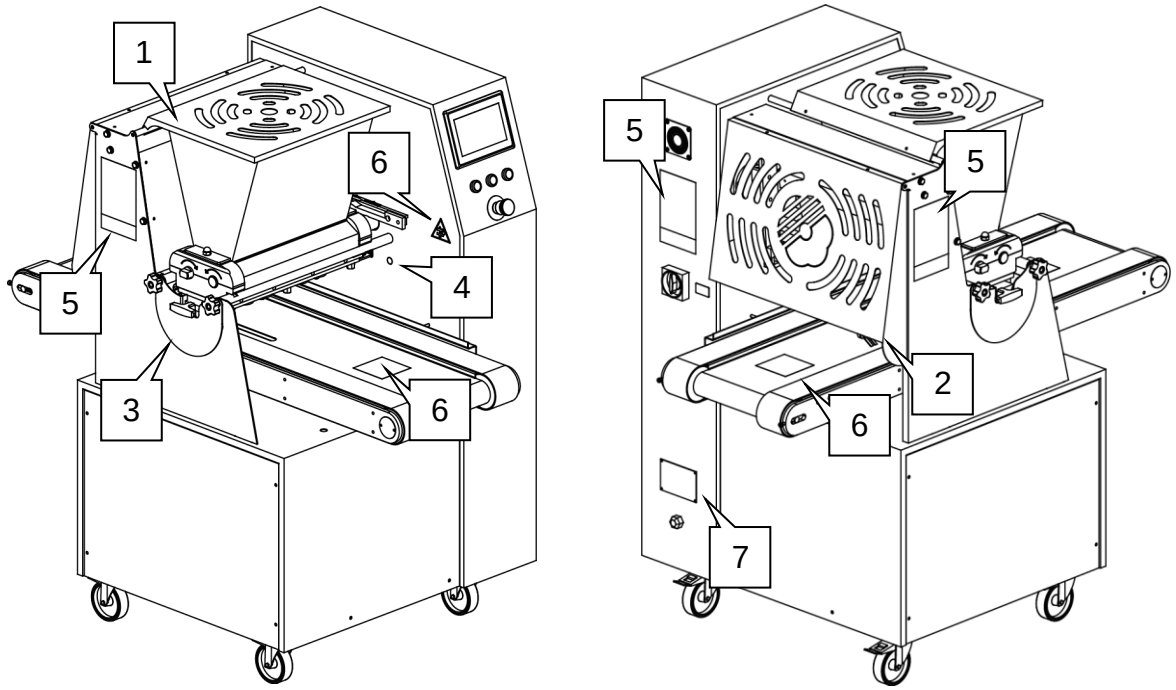

1. Hopper movable guard
2. Wire-cut device movable guard
3. Front guard
4. Photocell
5. Main pictogram
6. Pictogram “Hand crush hazard”
7. Information plate

3.5. RESIDUAL RISKS

While using the machine for production or maintenance, the residual risks present are possible crushing of the hands between the die and the conveyor or between the die and the tray positioned above the conveyor.

4. MACHINE DESCRIPTION

4.1. GENERAL DESCRIPTION

Extremely flexible dropping machine for the production of cookies and pastry in general.
Thanks to its interchangeable dosing units and several moulds with nozzles, the dropping machine features great flexibility in the typology of product and in the choice of the shape.

4.2. IDENTIFICATION

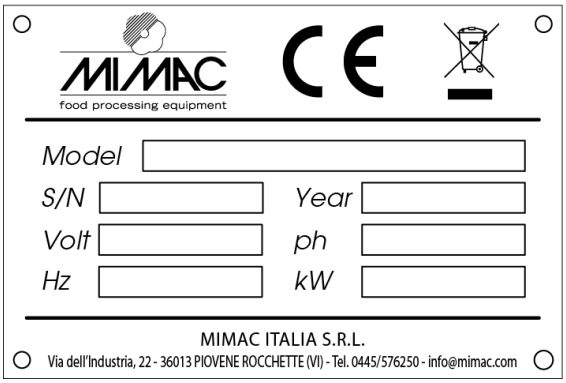

In each machine there is an identification plate containing information about the Manufacturer and the machine (model name, serial number, power supply, year of manufacture).

4.3. TECHNICAL SPECIFICATIONS

4.3.1. MAXIDROP TWIST / MAXIDROP TWIST EVO

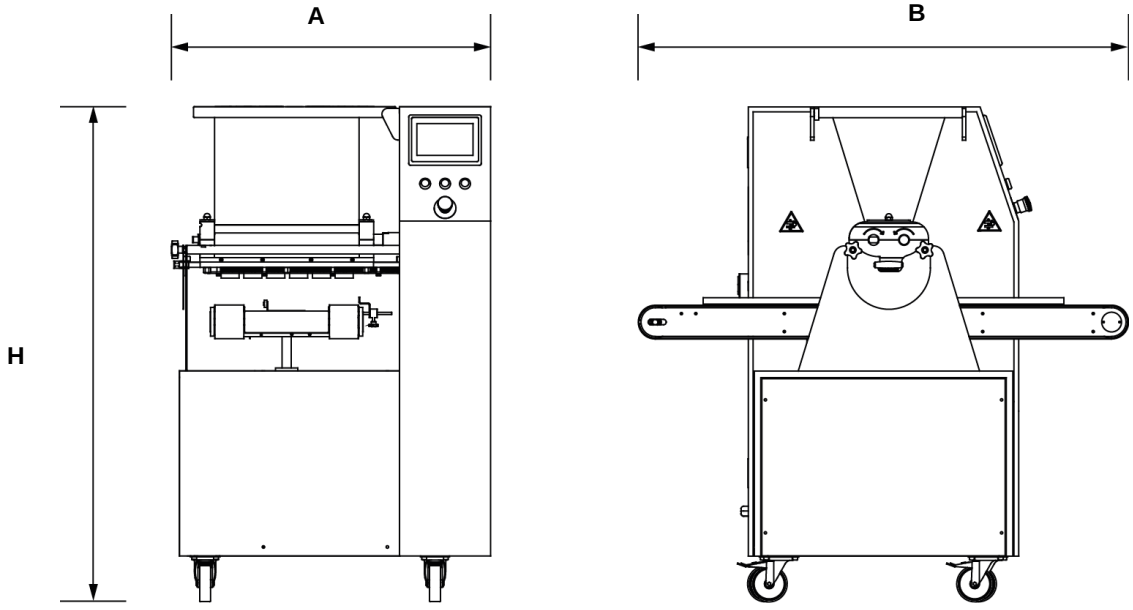

	MAXIDROP TWIST MAXIDROP TWIST EVO	MAXIDROP TWIST 600 MAXIDROP TWIST 600 EVO
Dimensions A B H	 880 mm 1360 mm 1380 mm	 1060 mm 1360 mm 1380 mm
Weight	265 kg / 270 kg	285 kg
Hopper capacity	29 lt / 32 lt	43 lt
Power supply	200-240 V - 50/60 Hz - 1ph	
Tray size	400x600 mm / 450x660 mm	600x400 600x800

4.3.2. MAXIDROP MAXX / MAXIDROP MAXX EVO

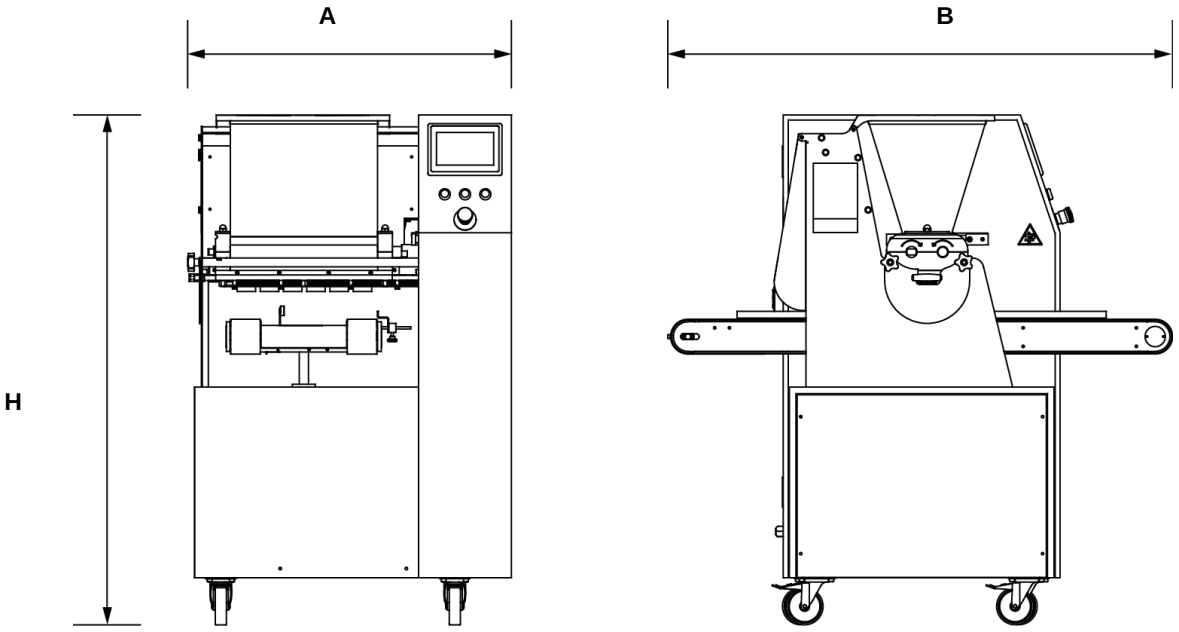

	MAXIDROP MAXX MAXIDROP MAXX EVO	MAXIDROP MAXX 600 MAXIDROP MAXX 600 EVO
Dimensions A B H	 880 mm 1360 mm 1380 mm	 1060 mm 1360 mm 1380 mm
Weight	270 kg / 275 kg	290 kg
Hopper capacity	29 lt / 32 lt	43 lt
Power supply	200-240 V - 50/60 Hz - 1ph	
Tray dimensions	400x600 mm / 450x660 mm	600x400 600x800

4.4. MAIN COMPONENTS

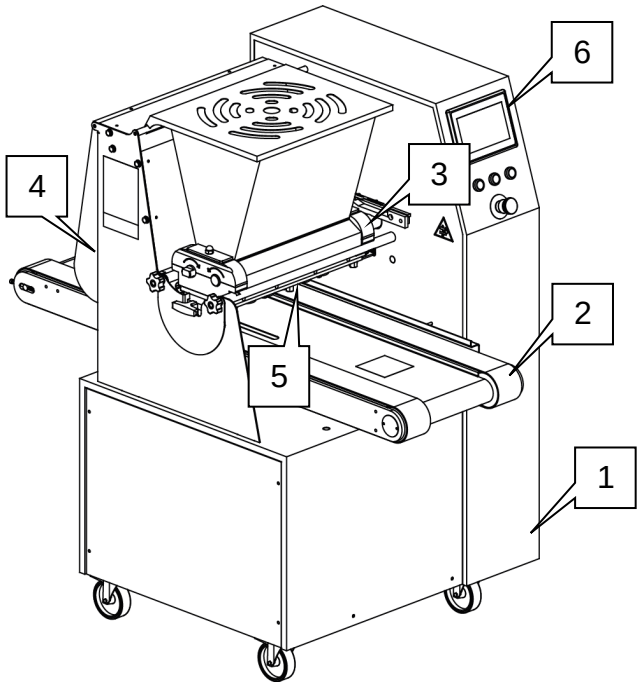

1 - Frame

The frame is made of steel, aluminium alloy and stainless steel, covered by stainless steel panels that are fast and easy to clean and sanitize.

2 - Conveyor

The conveyor allows the tray to move forwards or backward for an accurate placement and for moving while the machine is dropping. The conveyor makes also vertical movement to detach the product from the nozzles and to adjusts the thickness of the products.

3 - Dosing unit

The dosing unit drops the dough put into the hopper. The machine can be equipped with two different type of dosing unit:

- roller type to handle soft dough (e.g. meringues and éclairs) or harder dough (e.g. shortbread of almond dough);
- pump type to handle fluid dough or semi-dense dough (e.g. sponge cake or cupcake).

4 - Wire-cut device

The wire-cut device allows dosing of harder doughs in the desired thickness. Cutting is achieved by means of a steel wire fixed to a frame; the latter moves, making the wire rub against the plastic patterns that are placed on the die.

5 - Die

The die, complete with nozzles, gives the wanted shape to the products.

6 - Control panel

The control panel allows the operator to interface with the machine using the buttons and the touch screen control panel.

4.5. EQUIPMENT

The machine can be provided with different dosing units, moulds and nozzles in accordance with the need of the customer agreed at the time of the order. The standard equipment includes a kit of service wrenches.

4.6. WORKING AREAS

4.6.1. MAXIDROP TWIST / MAXIDROP TWIST EVO

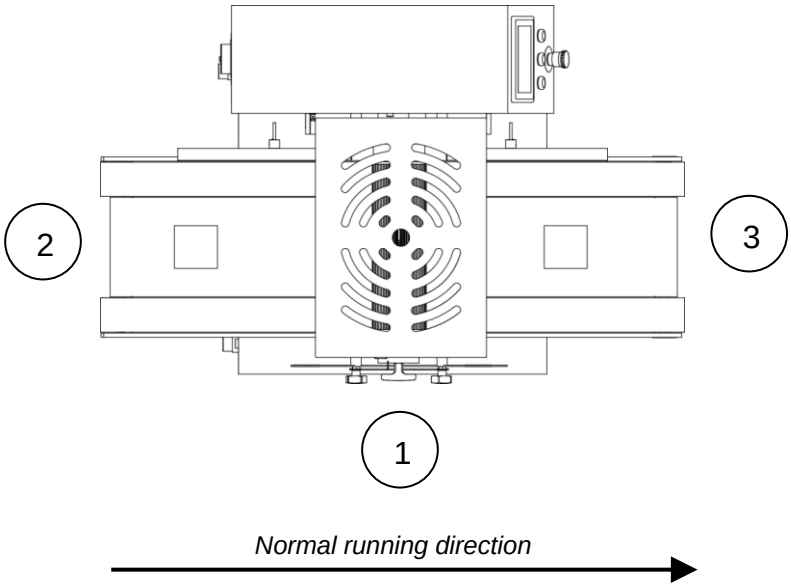

The machine can be used by one operator only, who fills the hopper, feeds the trays and removes them.

1. Hopper filling area
2. Tray feeding area
3. Tray removing area and control panel

4.6.2. MAXIDROP MAXX / MAXIDROP MAXX EVO

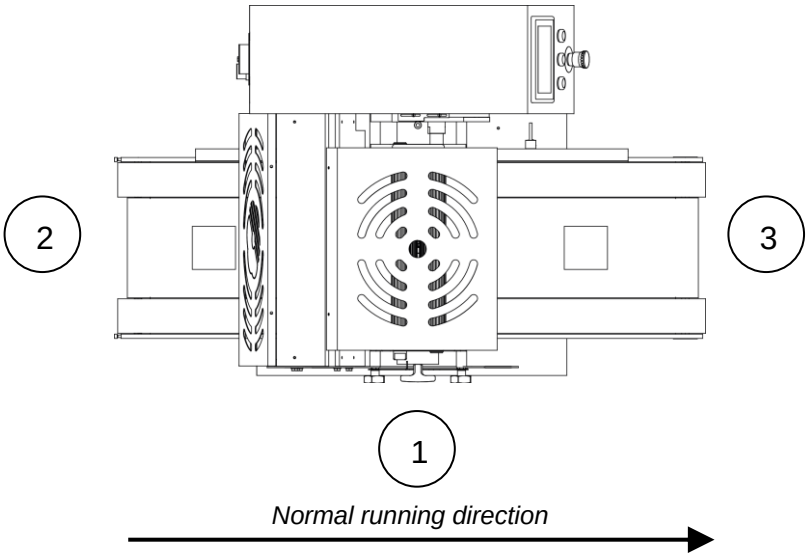

The machine can be used by one operator only, who fills the hopper, feeds the trays and removes them.

1. Hopper filling area
2. Tray feeding area
3. Tray removing area and control panel

4.7. PRODUCTS OVERVIEW

The machine can make many types of products set by default. By choosing one of the products available the system loads specific parameters.
Available products may differ depending on the model and options included.


Fxed product


Long product


Drop shaped product


Fixed product with rotation


Long product with rotation


Donut


Sponge cake


Fixed product with wire-cutting(1)


Long product with wire-cutting(1)


Crown


Continuous pastry(1)


Braid with wire-cutting(1)


Double product with rotation


Drop shaped product with rotation


Multilayer fixed product


Multilayer fixed product with rotation


Multilayer long product


Multilayer long product with rotation


Flame shaped product


Flame shaped product with rotation


Zeppola(2)

(1) Available on MAXIDROP MAXX and MAXIDROP MAXX EVO models only
(2) Available on MAXIDROP TWIST EVO and MAXIDROP MAXX EVO models only

5. START-UP AND OPERATION CHECKS

5.1. POSITIONING

The floor and/or supports on which the machine is positioned must be suitable for supporting the indicated weights.
Make sure enough space is left around the perimeter of the machine for using and carrying out maintenance on it safely.
When choosing the machine position, please consider these points:

- the machine size;
- the operator's working areas, the space necessary for loading / unloading the trays and the space necessary for accessing the control panel;
- the movements necessary for cleaning the work station and the machine;
- the space necessary for carrying out maintenance.

5.2. ELECTRICAL CONNECTION TO POWER SUPPLY AND EARTH

The Customer is always in charge of, and responsible for connecting the machine to the electric power supply. The Customer is also responsible for power conductor protection and creating a suitable and reliable earthing system.

The installing electrician must be specialized in work of this type. He/She must also be aware of all the technical notions and regulations for working in a professional manner.
The machine must be connected to the electric power system of the installation premises in compliance with standards (IEC-EN6 0204-I,IEC-EN 60349-I).
The power cable must be kept distant from parts that are hot, that can cut, or that move. It must also not obstruct operator and material movements in the installation area.
Make sure the machine voltage indicated on the identification plate corresponds to the line voltage of the laboratory; if it does not, DO NOT connect the machine to the power supply, instead contact the Retailer or Manufacturer immediately.
The machine must be connected to an earthing system which must be prepared by the Customer in compliance with what is indicated in current standards (LD 547/55 - IEC EN 60204-1 EN60445).
The connecting clamps are prepared inside the electric panel as specified in the attached wiring diagrams. Use the statutory earthing system, not pipes for gas, water or other unspecified metal holders.

5.3. CONTROL DESCRIPTION

5.3.1. CONTROL PANEL

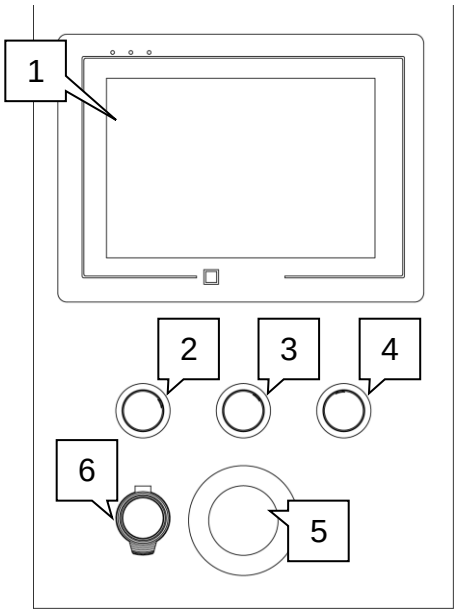

Operators have the control panel at their disposal, which can be used to carry out operations for setting up and controlling the machine.
The operator has a stop push-button to stop the machine, in addition to an emergency stop push-button and safety devices on the safety guards. Press the stop push-button to stop production temporarily. In danger situations, use the emergency stop push-button to immediately stop the machine.

	Description	Colour	Function
1	Touch screen panel	-	Programming / selection of the product to be made
2	Enabling push-button	Blue	Enables the machine to start production
3	Stop push-button	Red	Interrupts the production cycle
4	Start push-button	Green	Starts the production cycle
5	Emergency stop push-button	Red/Yellow	Stops the machine in an emergency
6	External USB port (optional)	Black	Flash drive connection for program backup/resetting and HMI updating

5.3.2. MAIN SWITCH

MACHINE OFF

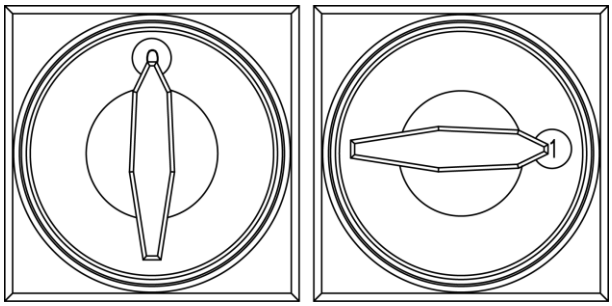

MACHINE ON

5.3.3. TOUCH SCREEN PANEL

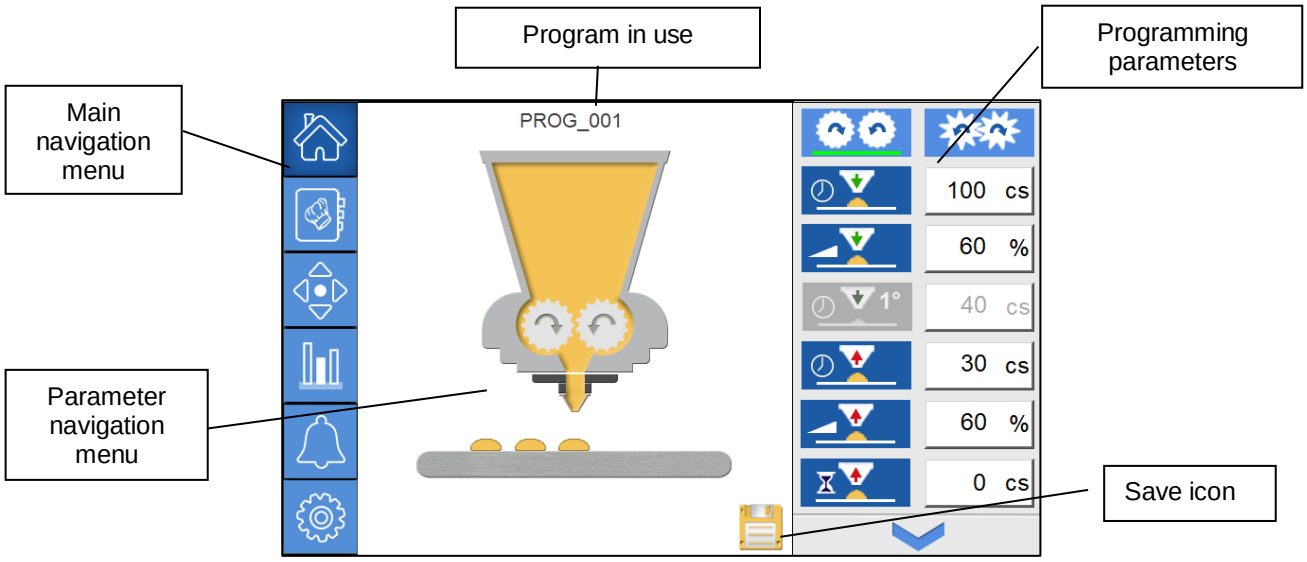

	Main page		Diagnostics screen
	Programs list		Alarm management
	Manual movements		Machine parameters

5.4. PRELIMINARY OPERATIONS

5.4.1. INSERTING THE ROLLER TYPE DOSING UNIT



1. Lay the head on the supporting rods



2. Delicately insert the two rollers



3. Carefully push the dosing group towards the structure, aligning the motor roller with the relative coupling



4. Insert the upper section of the head supports



5. Insert the hopper and fasten it using the relative stop nuts



6. Close the hopper guard

5.4.2. INSERTING THE PUMP TYPE DOSING UNIT



1. Lay the head on the supporting rods



2. Delicately insert the two rollers into the cavity



3. Position the front cap and fasten it using the relative stop nuts



4. Carefully push the dosing group towards the structure, aligning the motor roller with the relative coupling



5. Insert the hopper and fasten it using the relative stop nuts

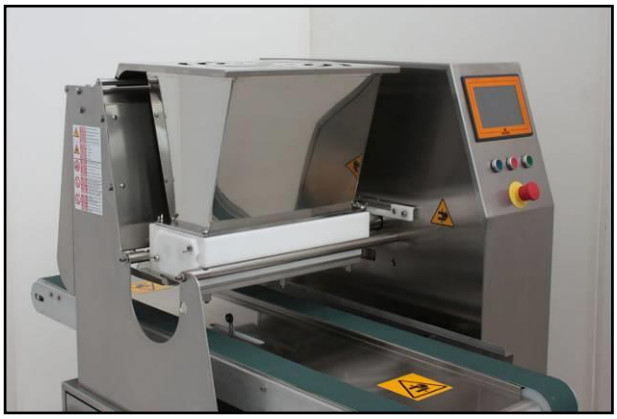

6. Close the hopper guard

5.4.3. INSERTING THE MOULD



1. Loosen the gib nuts and insert the mould delicately



2. Push the mould in fully, making sure that the mould plate is against the machine structure or, with a rotary mould, that the rotating gear is inserted correctly



3. Position the front guard and fix it using the relative knobs

5.4.4. INSERTING AND ADJUSTING THE WIRE CUTTING SYSTEM

The motorized wire cutting system can be moved after having carefully assembled the relative die onto the roller type dosing group and the relative wire-cut frame.
When preparing for wire cutting, carefully and accurately position the frame arms against the die. Also make sure that the steel wire is tightened and fitted correctly. If the wire does not cut the dough that exits from the moulds simultaneously and with the same tightness, the product will not fall onto the trays in aligned rows. Make sure that the steel wire is placed and tensioned correctly.

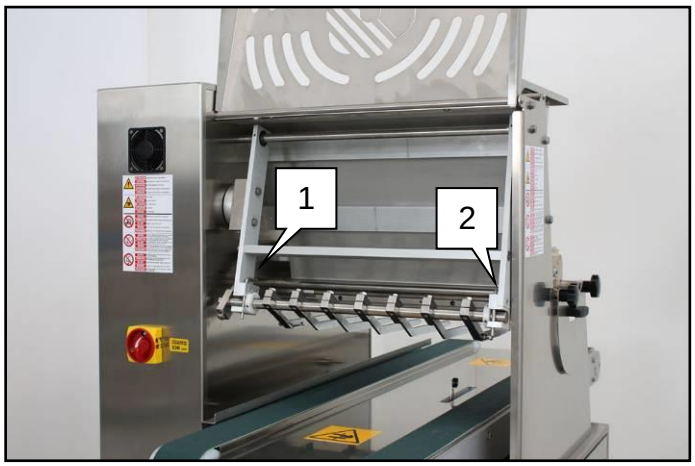

1. Pull the check pins up (parts 1 and 2), insert the tray into its seats and release the check pins.

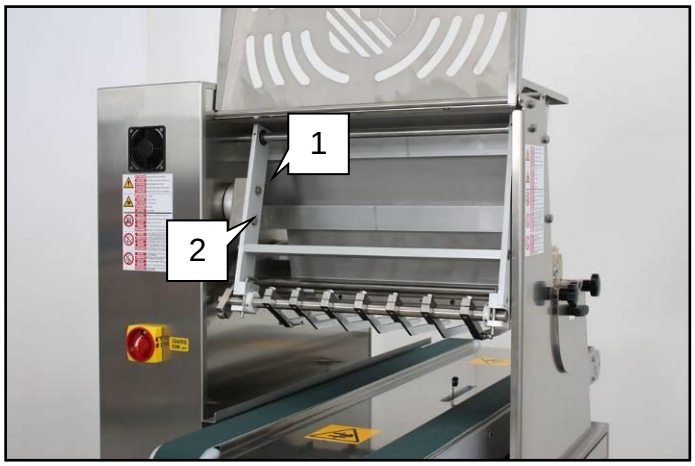

2. Fully unscrew screw No. 2 and loosen screw No. 1.

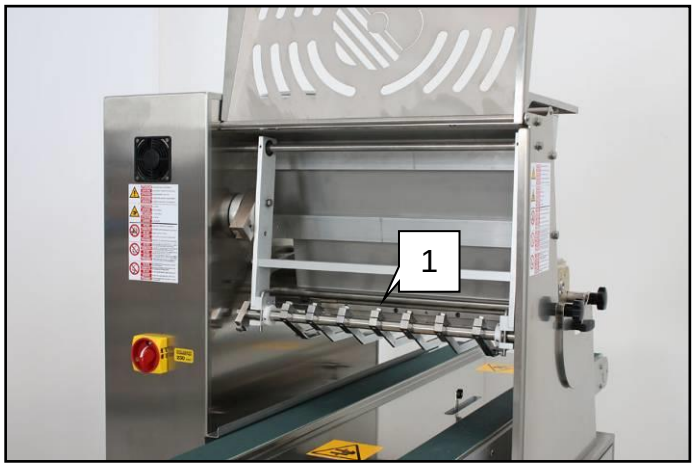

3. Make sure the arms are aligned with the die, carefully pushing the frame forward and backward manually.
To adjust the transversal position of each arm, loosen the relative rear lock screw (part 1), then adjust and tighten the screw again.

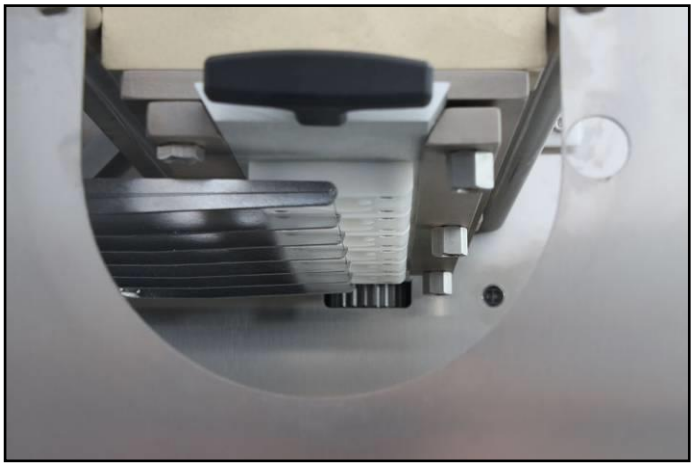

4. Make sure the wire is in contact with the plastic mould.

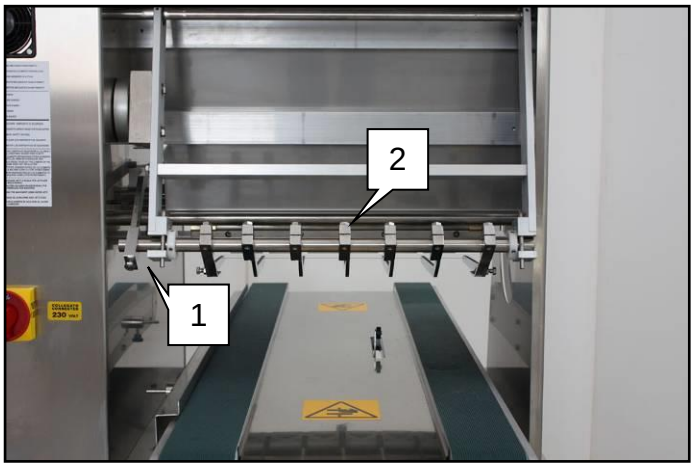

5. To adjust the vertical position of all the arms contemporaneously, loosen the guide arm lock screw (part 1), adjust and tighten the screw again.
To adjust the vertical position of the individual arms, loosen the relative rear lock screw (part.2), adjust and then tighten the screw again.

While adjusting the frame, make sure that the guiding pin remains in contact with the metal plate of the guiding shoe.

Remove the wire-cut frame from the machine when it is not required for production.

5.4.5. INSERTING/REPLACING THE STEEL WIRE

Maximum care must be taken when carrying out this operation to prevent moving the arm position unexpectedly.

1. Lift the rear mobile guard.
2. Pull the frame check pins up.
3. Remove the frame from its seat.
4. Delicately remove the worn/broken wire, making sure to have removed all of it, even from around the tightening screws.



5. Insert the replacement wire, passing it through the holes of the arms, being very careful not to bend it excessively.



6. Fix the first end of the steel wire, inserting it into the adjustment screw hole and wind it around the screw a few times in order to guarantee a perfect hold.
7. Cut the wire to size and repeat the fixing operation at the other end of the frame.



8. Use the second screw to tighten the steel wire suitably, and tighten the nut to lock it.
9. Reposition the frame on the machine.

The wire-cut frame is carefully adjusted and tested during the inspection phase, which is carried out before shipping.

5.5. CHECKING THE SAFETY DEVICES

5.5.1. MAXIDROP TWIST / MAXIDROP TWIST EVO

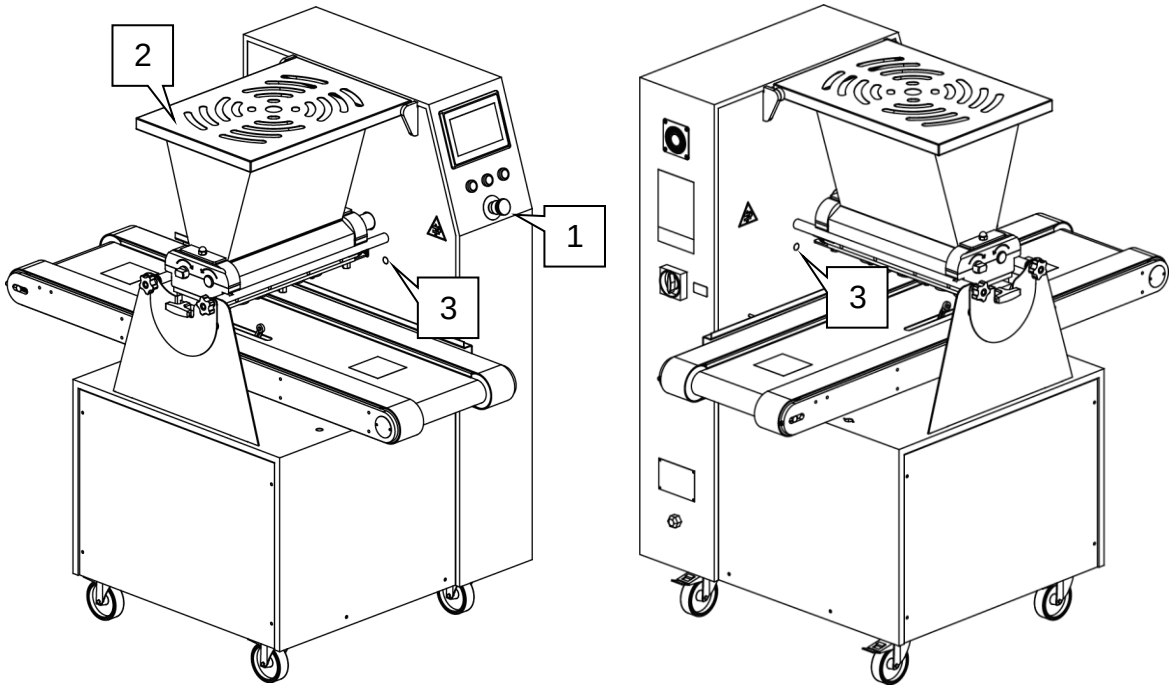

Always check the safety devices before using the machine:

1. press the emergency stop push-button on the control panel (part 1);
2. activate the safety micro-switches by lifting the mobile guards of the machine (part 2);
3. interrupt the safety photocell beam by placing a solid object between it and the reflector in front of it (part 3).

Each of the listed tests must make all the machine movements stop, with the machine entering an emergency state; when in this condition the machine must be reset to start operating normally again.
If this is not the case, immediately inform the Safety Manager.

.

5.5.2. MAXIDROP MAXX / MAXIDROP MAXX EVO

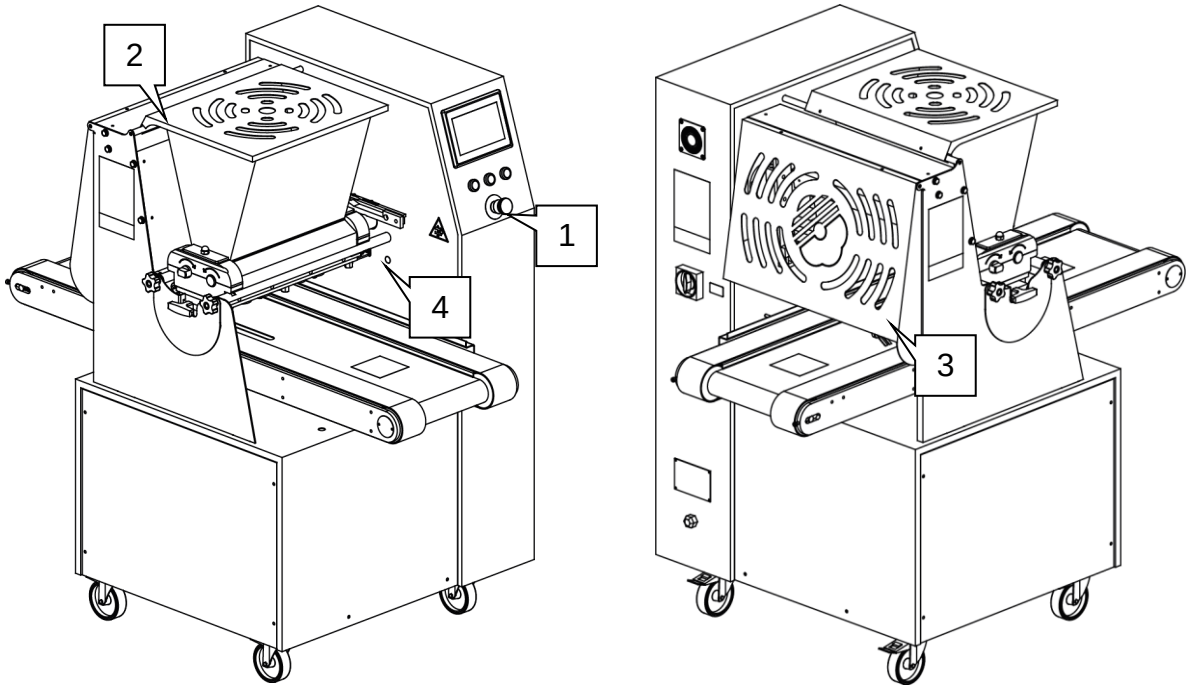

Always check the safety devices before using the machine:

1. press the emergency stop push-button on the control panel (part 1);
2. activate the safety micro-switches by lifting the mobile guards of the machine (part 2 and part 3);
3. interrupt the safety photocell beam by placing a solid object between it and the reflector in front of it (part 4).

Each of the listed tests must make all the machine movements stop, with the machine entering an emergency state; when in this condition the machine must be reset to start operating normally again.
If this is not the case, immediately inform the Safety Manager

6. MACHINE USE

6.1. SELECTING A PROGRAM

Press the  icon to enter the Programs List.

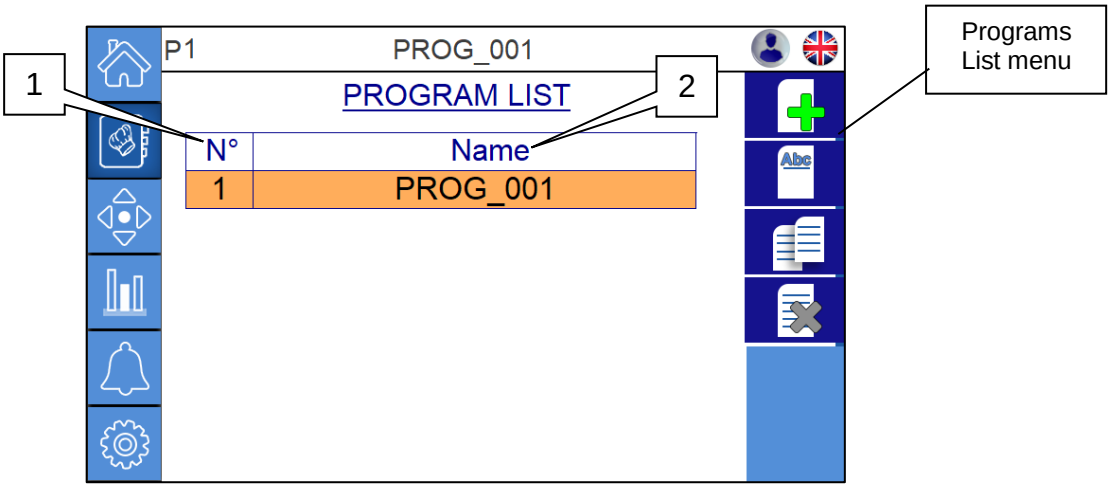

Press the program line you want to select to confirm
The selected program will be highlighted in orange colour.
If the machine features more than a program, it is possible to view them in upward or downward order, according to the number they were input, or in alphabetical order, according to the program's name.
Press on the field "N°" (1) to view the programs ordered by number or on the field "NAME" (2) to order them by name.

Parameter	Icon	Description
Create a new program		Pressing this key, the procedure for creating a new program starts.
Rename a program		Pressing this key, a keyboard for renaming the program comes up.
Duplicate a program		Pressing this key, the procedure for duplicate the selected program starts.
Cancel a program		Pressing this key, the selected program is cancelled. When only one program is left, the key turns to grey and the function is disabled.

6.2. CREATING/MODIFYING A PROGRAM

After having selected the required position as described in the previous paragraph, press the  icon to see the first programming display.
Press the Cancel button to cancel the operation.
Pressing the "OK" key a new program is created and added at the bottom of the list of existing programs. When closing the selection frame, a keyboard comes up for punching in the program name. The program suggests a standard name like for example PROG_XXX.

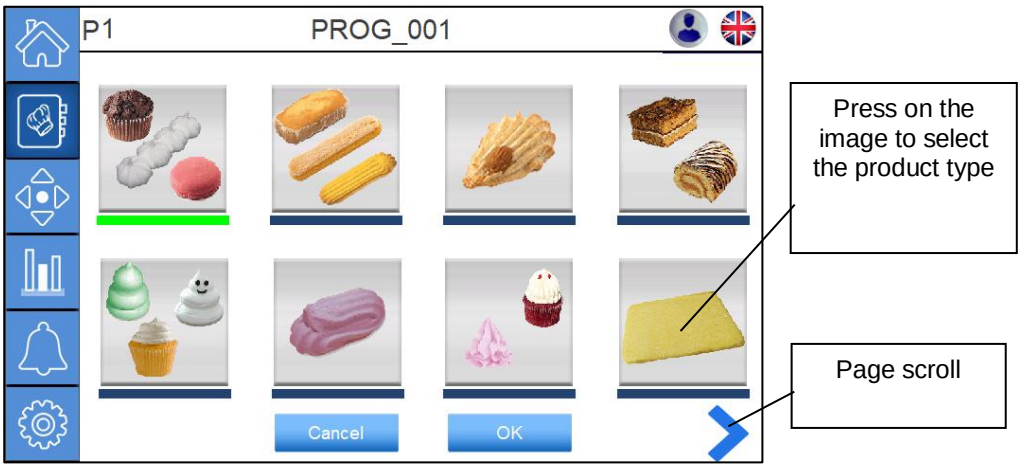

6.3. PARAMETERS' MENU

The main frame also shows the parameters' menu of the program that is being used.
Pressing on one of the active areas, highlighted below, the parameters relative to the selected menu are displayed in the space reserved for them.

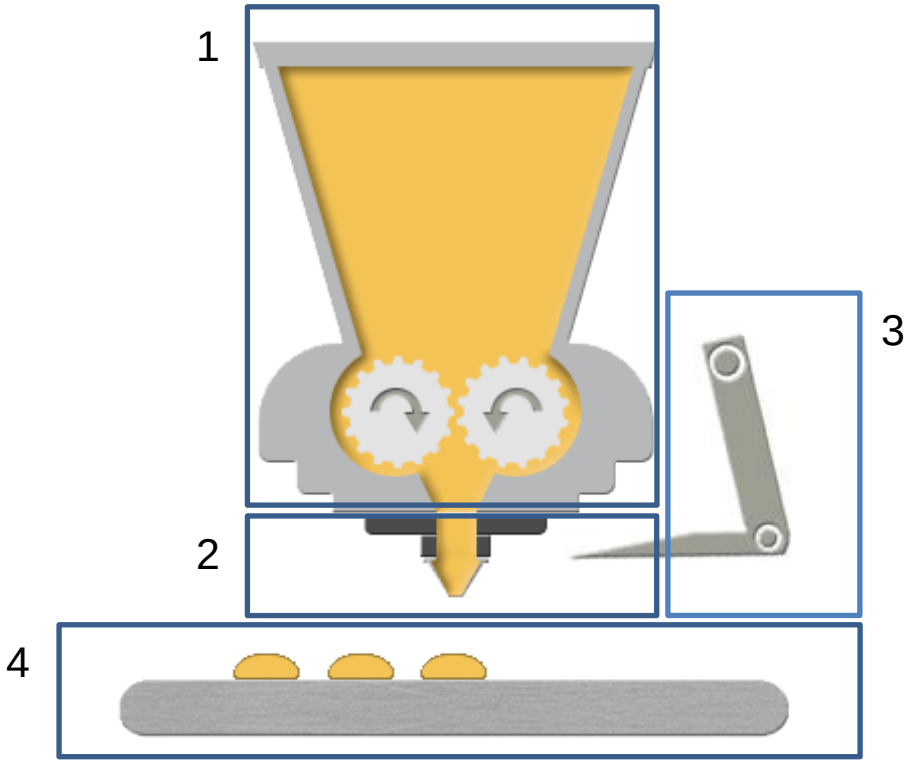

Number	Description
1	Dosing parameters' menu
2	Nozzle rotation parameters' menu
3	Wire-cutting menu
4	Lifting and tray feed menu

6.4. DESCRIPTION OF PRODUCT PARAMETERS

The keys with a blue background  are merely descriptive, and indicate what value needs to be entered in the area placed to their right.

Descriptive icon	Area where entering the parameter value
	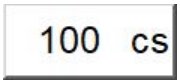

The keys with a pale blue background  function as selectors and can also have the function of describing the parameter.
When the key is selected, a green line appears at the bottom of the key itself.

Disabled	Enabled
	

The keys with a grey background  and grey text in the area where the value has to be entered are disabled
For information concerning the necessary conditions for enabling these specific parameters please refer to the description of the parameters themselves.

Disabled parameter	Disabled parameter value entering
	

Parameter	Icon	Description
Keys for page scrolling		Pressing this key one moves to the next parameters page
		Pressing this key one moves to the previous parameters page.
Keys for viewing the feed and lifting parameters.		Pressing the horizontal arrows, one moves to the feed menu.
		Pressing the vertical arrows, one moves to the lifting menu.

6.4.1. DOSAGE PARAMETERS

Parameter	Icon	Description
Head type		If selected, the type of dosing group is set to rollers.
		If selected, the type of dosing group is set to pump.
Dropping time		Dosing rollers rotation time. Regulates the quantity of product to be dosed.
Product length		Length of the product to be made.
		
Dropping speed		Dosing rollers rotation speed. Regulates the quantity of product to be dosed.
Conveyor speed		Conveyor speed during the dosing phases.
		
		
Initial uniformity		Duration of the initial dropping phase carried out with steady belt and/or nozzles (according to the type of product selected) to even dosing start.
Final uniformity		Duration of the final dropping phase carried out with steady belt and/or nozzles (according to the type of product selected) to even dosing ending.
		
		
Dropping speed on final uniformity (*only drop shape product*)		Dosing rollers rotation speed during the final uniformity phase in drop shape products.
Initial uniformity #2		If the value is different from zero the machine, after performing the final uniformity, reposition itself at the beginning of the product and perform a further dosage.

Parameter	Icon	Description
Vacuum		Intake time at the end of dosing.
Vacuum speed		Dosing rollers rotation speed. Regulates the quantity of aspirated product.
Pre-vacuum pause		Time elapsed between the end of the dosing phase and the beginning of the vacuum phase.
Final vacuum		Intake time at the end of the tray.
First row dropping time correction		Added to or deducted from the dosing time (or the initial uniformity) of the first row of each tray.
Dropping time of each single layer in the fixed multilayer product		Dosing rollers rotation time in the first layer. Regulates the quantity of product to be dosed.
		Dosing rollers rotation time in the second layer. Regulates the quantity of product to be dosed.
		Dosing rollers rotation time in the third layer. Regulates the quantity of product to be dosed. If it is set to zero the product will have only two layers.
Product length of each single layer in the long multilayer product		Length of the first layer of the product to be made.
		Length of the second layer of the product to be made.
		Length of the third layer of the product to be made. If it is set to zero the product will have only two layers.
Conveyor speed during dosage of each single layer in the long multilayer product		Conveyor speed during the dosing phases on the first layer.
		Conveyor speed during the dosing phases on the second layer.
		Conveyor speed during the dosing phases on the third layer.
Single or multi-step dosage mode		If selected, the machine performs a single dosage for each row.

Parameter	Icon	Description
	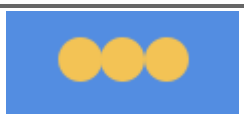	If selected, the machine performs multiple dosages for each row.
Multi-step product length		Distance between the first dosage and the last in multi-step products. Available only if the multi-step product is enabled.
Number of dosages per product		Number of dosages performed for each multi-step product. Available only if the multi-step product is enabled.
Number of dosages for crown type product		Number of dosages carried out over the circumference of the crown type product.
Shape of the drop type product		If selected, the dosage starts at the maximum speed and then decreases during the advancement until the minimum speed is reached at the end of the set product length.
		If selected, the dosage starts at the minimum speed and then increases during the advancement until reaching the maximum speed at the end of the set product length.
		If selected, the dosage starts at the maximum speed and then decreases during the advancement, reaching the minimum speed at half of the product length. Then start increasing until the maximum speed is reached at the end of the set product length.
		If selected, the dosage starts at the minimum speed and then increases during the advancement reaching the maximum speed at half of the product length. Then start decreasing until the minimum speed is reached at the end of the set product length.
Minimum dropping speed		Dosing rollers rotation speed used in the dosing phase with less spillage of dough in drop type products.
Increase table distance (*only Zeppola product*)		Increase the distance between the nozzles and the tray before the second dosage. Adjust the height of the product.
Advance of the stop of the nozzles' rotation (*only Zeppola product*)		Advance time of the stop of the nozzles' rotation during the dosing phase.

6.4.2. NOZZLES ROTATION PARAMETERS

Parameter	Icon	Description
Nozzles speed		Nozzles rotation speed.
Mould coefficient		Coefficient used to calculate the amount of rotation performed by the nozzles. The value corresponds to the number of teeth of the nozzle holder gear.
Rotating scrape time		Extra nozzle rotation at the end of dropping to prevent the formation of a peak.
Rotating scrape direction		If selected, the direction of rotation of the nozzles during the rotating scrape phase agrees with the direction of rotation during the dosage.
		If selected, the direction of rotation of the nozzles during the rotating scrape phase it is opposite with the direction of rotation during the dosage.
Rotating scrape speed		Nozzles rotation speed during the rotating scrape phase.
Rotation mode		If selected, the rotation of the nozzles is disabled.
		If selected, the rotation of the nozzles occurs anticlockwise respect to the motor rotation.
		If selected, the rotation of the nozzles occurs clockwise respect to the motor rotation.
Rotation mode on initial uniformity		Allows to select the rotation mode during the initial uniformity phase of the dosage.
Rotation mode during the advancement of the belt		Allows to select the rotation mode during the product length dosage phase.
Rotation mode on final uniformity		Allows to select the rotation mode during the final uniformity phase of the dosage.
Rotation mode on initial uniformity #2		Allows to select the rotation mode during the second initial uniformity phase of the dosage.
Rotation mode on initial uniformity, for flame products		Allows to select the rotation mode during the initial uniformity phase of the dosage, for flame products.
Rotation mode during lowering		Allows to select the rotation mode during the conveyor lowering phase, for flame products.

Parameter	Icon	Description
Nozzles rotation speed during the dosing of the different layers of the multilayer products		Rotation speed of the nozzles during the dosing of the first layer.
		Rotation speed of the nozzles during the dosing of the second layer.
		Rotation speed of the nozzles during the dosing of the third layer.
Rotation mode during the dosing of the different layers of the multilayer products		Allows to select the rotation mode when dosing the first layer.
		Allows to select the rotation mode when dosing the second layer.
		Allows to select the rotation mode when dosing the third layer.
Rotation mode during the dosing of the double rotated products		Allows to select the rotation mode when dosing the first product.
		Allows to select the rotation mode when dosing the second product.
Rotation mode while advancing the tray		If selected, rotation occurs along the entire length of the product. Available only if rotation is enabled during tray advancement.
		If selected, rotation occurs only in the central part of the product. Available only if rotation is enabled during tray advancement.
Length in which the rotation takes place in the central part		It allows to set the length in which the rotation takes place in the central part of the product.
Nozzles radius		Measurement of the radius of the nozzles in use expressed in mm.

6.4.3. WIRE-CUTTING PARAMETERS

Parameter	Icon	Description
Wire-cutting speed		Wire cutting system speed.
Wire-cutting waiting time		Time elapsed between wire cutting system starting and the belt conveyor forward command.
Falling correction		Has an effect on the true position of the tray to compensate forward movement during the product dropping phase when using the wire cutting system.
Wire-cutting enable (*only for braid products*)		Disables the use of wire-cutting at the end of the dosage of braid type products.
		Enables the use of wire-cutting at the end of the dosage of braid type products.
Wire-cutting mode		Wire-cutting stop forward.
		Wire-cutting stop back.
		Wire-cutting stop alternately.

6.4.4. TRAY ADVANCE PARAMETERS

Parameter	Icon	Description
Number of rows		Number of rows created on each tray.
Tray length		Length of the trays used.
Initial space		Space between the tray edge and the initial dropping position of the first row.
Travel speed		Tray advancement speed during the transfer between the row just made to the next one.
Scrape direction		If selected, the movement of the belt at the end of the dosing, in order to prevent the formation of the tip, takes place in the same direction as that of advance during the dosage. The value next to it indicates the length of the movement.

Parameter	Icon	Description
		If selected, the movement of the belt at the end of the dosing, in order to prevent the formation of the tip, takes place in the opposite direction of that of advance during the dosage. The value next to it indicates the length of the movement.
Direction		If selected, the tray moves in the normal running direction.
		If selected, the tray is inserted and extracted from the tray removal area; the machine works *Forward.*
		If selected, the tray is inserted and extracted from the tray feeding area; the machine works *Backward.*
		If selected, the tray moves in a direction that is opposite the normal running direction.
Tray presence memorization		If selected, the tray sensor is disabled after the tray has been detected.
		If selected, the tray sensor is continually active.
Method of calculating the step between the rows		If selected, the machine automatically calculates the step length between the rows based on the parameters set.
		If selected, the operator has the option of directly entering the step length.
Step length		Distance between one row and the next one. In the case of long products, the length of the product must be less than that of the step. Otherwise the program will modify it automatically.
Enable double Flexipan mode		If selected, the double Flexipan mode is disabled.
		If selected, the machine will perform an intermediate step after completing the number of rows and will restart to execute the programmed number of rows again.
Intermediate step length		Length of the intermediate step between the last row of the first Flexipan and the first row of the second Flexipan.
Initial return		With Sponges, backward movement made at the start of the tray, with dosing active, to even dosing at the start of the tray.

6.4.5. LIFTING PARAMETERS

Parameter	Icon	Description
Table distance		Distance between the nozzles and the tray during the dosage.
Table movement		If selected, table with vertical up and down movements for each row.
		If selected, table stopped at the low position during the dosing cycle.
		If selected, table stopped at the high position during the dosing cycle.
		If selected, table stopped at the high position during the dosing cycle of the tray. At the end of the tray will lower.
Height of lowering of the table		If enabled, table lowering distance at the end of the dosage.
Table lifting speed		Lifting speed of the table.
Table lowering speed		Lowering speed of the table during the detachment phase.
Earlier dropping		If *Table movement* is set on *Up/Down*: - dosing starts when the table is at the set distance as to the height to be reached. If *Table movement* is set on *Top stop/Low stop*: - dosing starts when the tray is at the set distance as to the position to be reached.
Cycle speeding up		If selected, speeding up of the work cycle is inactive, the movements are performed in sequence.
		If selected, the simultaneous movement of table and conveyor to reach the set row positioning is active thus allowing to increase the machine productivity.
Dosage height of each single layer in fixed multilayer products		Distance between the nozzles and the tray when dosing the first layer.
		Distance between the nozzles and the product when dosing the second layer.
		Distance between the nozzles and the product when dosing the third layer.

Parameter	Icon	Description
Dosage height of each single layer in long multilayer products		Distance between the nozzles and the tray when dosing the first layer.
		Distance between the nozzles and the product when dosing the second layer.
		Distance between the nozzles and the product when dosing the third layer.
Flame product height		Total height of the flame type product.
Table lowering speed during dosing		Lowering speed of the table during the dosing phase.

6.5. COPYING A PROGRAM

To duplicate a program, select the program to duplicate. Press then the  key.
The program will make a copy of the original program in a new position of the programs' list adding "_1" at the end of the original program's name.

6.6. MODIFYING PARAMETERS DURING OPERATION

During the working cycle it is possible to modify all the parameters remaining enabled. The parameters that cannot be modified are displayed with a grey background as indicated under paragraph 6.4

6.7. PROTECTING PROGRAMS WITH A PASSWORD

Different users can be associated to the machine and a security level and password are associated to each user. Therefore, each user will be able to carry out only certain operations.
Once a user logs in, the session will remain active till when he/she logs out pressing the key of the active user or else till the session duration set in the parameter **"User session expiry"** is over.
It is possible to select the basic level user in charge of starting the machine through the **"Automatic login"** parameter one can find in the **"Advanced parameters / Advanced"** section.

Level	User name	Symbol	Description
Basic	**NONE**		If the user is set on NONE, it is necessary to set a higher-level user and enter the relevant password to carry out all operations, including starting production.
	USER		If the user is set on USER, the operator can select the program to launch, modify temporarily certain parameters, but cannot save data unless he/she enters the password. The default password is 2569
	ADVANCED		If the user is set on ADVANCED the operator can modify and save the programs' parameters, can manage the programs' directory and has a limited access to the advanced parameters. The default password is 2507.
Advanced	**TECHNICIAN**		If the user is set on TECHNICIAN the operator can carry out all the operations an ADVANCED user can perform. Moreover, it can modify the machine parameters The default password is 3050
	SELLER		Restricted to the vendor.
	BUILDER		Restricted to the manufacturer.
	ADMIN		Restricted to the manufacturer.

6.8. PROGRAM BACKUP/RESTORE

6.8.1 BACKUP

Through the backup procedure it is possible to save programs and machine data in a pendrive.

1. Access the advanced parameter area and press the “start” key. Wait for the frame below to appear:

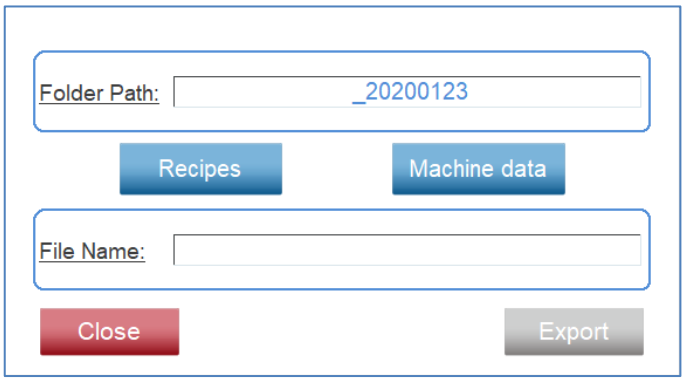

2. Insert the USB flash drive in the port located at the back of the touchscreen or, if it is foreseen, in the port located on the front control panel.
3. The machine automatically creates a folder where to save the backup file, with a name including the “HMI name” parameter followed by the date. This will allow to identify it more easily at a future stage.
4. Press the key “Recipes” or “Machine Data”, depending on which parameter list needs to be saved. The machine creates a file name. Just like for the folder, the name will include the prefix “Recipe_” followed by date and hour, in case one was saving a program, or else the name will include the prefix “Machine” followed by date and hour, in case one was saving the machine data.
5. Once the parameter list to be saved is selected, the “Export” key is enabled.
6. Press the Export key to start the saving procedure, wait till the procedure is completed, exit the page and remove the USB flash drive.

Backing up the program on the USB flash drive overwrites any saved data that are already present. The overwritten data will be lost and will not be recoverable.

6.8.2 RESTORE

It is possible to upload programs and machine data previously saved in a USB flash drive in the machine through the “restore” procedure

1. Access the advanced parameters’ area and press the “start” key. Wait for the frame below to appear:

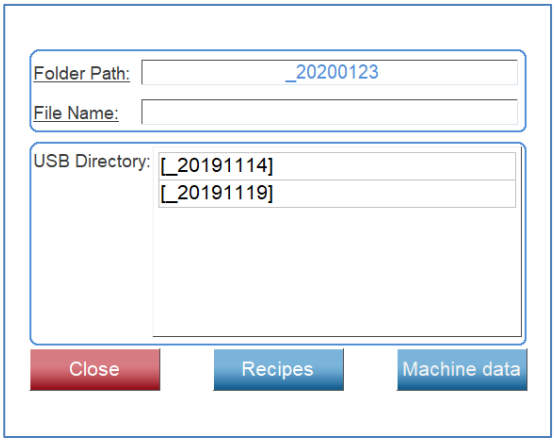

2. Insert the USB flash drive in the port located at the back of the touchscreen or, if it is foreseen, in the port located on the front control panel.
3. Select the file to be imported.

4. Press the key “Recipes” or the key “Machine Data”, depending on which parameters’ list one needs to import. The machine scans the file and, if it is correct, start the import procedure, overwriting the contents of the machine memory. If any mistake is detected in the selected file, the procedure is interrupted and an error signal will appear.
5. Exit the page and remove the USB flash drive.

Restoring the programs from the flash drive returns the Programs list to when the data on the flash drive was last saved.
All modifications made after this will be lost and will not be recoverable.

6.9. WARNINGS ON PROGRAMMING

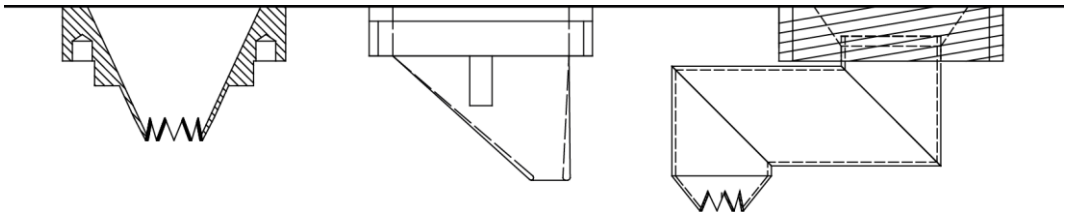

The *Conveyor distance* parameter may not represent the real distance between the nozzles and the tray because of the type of nozzles used.
Before starting production, make sure that the set value does not cause the nozzles and the tray to collide.

Before starting production, make sure that the *Initial Space* parameter makes it possible to have the correct distance between the nozzles and the tray edge, above all if the nozzles used are of the off-centre type.

MIMAC ITALIA is not liable for any damage caused by incorrect machine programming.

6.10. STARTING PRODUCTION

4. Connect the power cable to the mains.
5. Fit the dosing unit, die and selected nozzles.
6. Turn the main switch to "ON".
7. Place the dough in the hopper.
8. Make sure the emergency stop push-button has not been pressed and that the guards are not open.
9. Pressurize.
10. Select or create the work program.
11. Start production by pressing the enabling push-button, followed by the start push-button.

The machine works continuously with the automatic start command; the operator must load and unload the trays, considering that a distance of at least 5 cm must be kept between them during loading.

If the next tray is loaded onto the belt conveyor at a distance that is higher than the value set for the Tray Exiting Space parameter, belt movement stops automatically and the user must press the Start push-button to restart production.

6.10.1. PLACE THE DOUGH IN THE HOPPER

12. Press the stop push-button to halt the machine.
13. Lift the hopper guard.
14. Place the dough in the hopper.
15. Close the hopper guard.

For better machine operation we recommend loading the hopper to a maximum of 60-70% of its volume.

6.10.2. PRESSURIZING THE SYSTEM

In order to adjust the dosage from the first rows, pressurize the dough before the start of each production cycle.

Press the  icon to access the manual movements page.

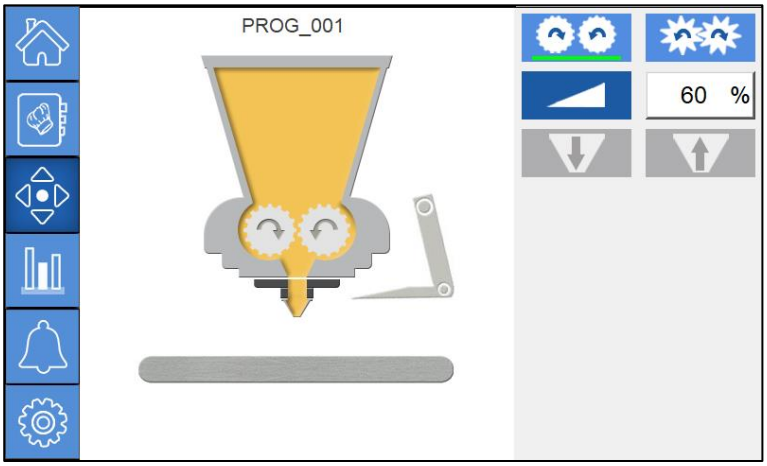

Manually insert a tray under the dosing unit.
Press the enable push-button.
Press the start push-button.
Select the type of dosing unit in the dosage menu.

Keep the 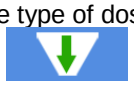 icon pressed.

Release the icon when the product in the hopper begins exiting from the nozzles.

To prevent unwanted product drips at the end of the procedure, keep the  icon pressed for a few seconds.

After pressurizing, manually remove the tray and press the  icon.

6.11. KEY TO MANUAL CONTROL ICONS

6.11.1. DOSING CONTROL ICONS

Parameter	Icon	Description
Head type		If selected, the type of dosing group is set to rollers.
		If selected, the type of dosing group is set to pump.
Dropping speed		Dosing rollers rotation speed.
Dosage command		As long as the button is pressed, the dosage takes place. The machine in start state is required. Insertion of the pan under the dosing group is required.
Vacuum command		As long as the button is pressed, the aspiration takes place. The machine in start state is required. Insertion of the pan under the dosing group is required.

6.11.2. NOZZLES ROTATION CONTROL ICONS

Parameter	Icon	Description
Nozzles rotation speed		Speed of the rotation of the nozzles.
Nozzles rotation command		As long as the button is pressed, the nozzles rotate counter-clockwise. The machine in start state is required.
		As long as the button is pressed, the nozzles rotate clockwise. The machine in start state is required.
Angle measurement		Indicates the position of the nozzles expressed in degrees (°).

6.11.3. WIRE-CUTTING CONTROL ICONS

Parameter	Icon	Description
Enabling wire-cutting commands		If selected, disables manual controls for wire-cutting. The machine must not be in the start state.
		If selected, enables the possibility of using manual controls for wire cutting. The machine must not be in the start state.
Wire-cutting speed		Speed of wire-cutting system
Wire-cutting operating mode		Wire-cutting movement continuously until the start command is pressed.
		Wire-cutting stop forward.
		Wire-cutting stop back.
Start command		Starts the wire-cut movement. Depending on the operating mode chosen, it performs a complete cycle or movement occurs as long as the button is pressed. The machine in start state is required.
Stop command		Stops the movement of the wire-cut.

6.11.4. TRAY ADVANCE CONTROL ICONS

Parameter	Icon	Description
Conveyor speed		Conveyor advancement speed.
Advance command		As long as the button is pressed, the conveyor moves forward. The machine in start state is required.
		As long as the button is pressed, the conveyor moves backwards. The machine in start state is required.
Amount of movement		Indicates the position of the belt expressed in mm.

6.11.5. LIFTING CONTROL ICONS

Parameter	Icon	Description
Lifting speed		Speed of the table lifting
Lifting command		As long as the button is pressed, the table goes up. The machine in start state is required.
		As long as the button is pressed, the table goes down. The machine in start state is required.
Amount of movement		Indicates the position of the table expressed in mm. If the machine has already carried out the reset procedure, it indicates the distance between the table and the nozzles.

6.12. MACHINE STOPPING DURING AN EMERGENCY

The machine stops immediately when the emergency stop push-button is pressed.

This control must only be used in emergency situations!
Do not use the emergency stop push-button for stopping the machine normally!

Before restarting production, make sure the emergency situation has stopped, then reset the emergency stop push-button, press the enabling push-button and after this the start push-button.

Stopping the machine with the emergency stop push-button resets the production cycle.

7. SETUP AND DIAGNOSIS

7.1. MACHINE PARAMETERS

The machine parameters are inserted during the test phase by our qualified technicians. Unauthorized people must NOT modify these parameters for any reason whatsoever. The Producer is not liable for any faults, breakages or damage that are traceable to the unauthorized modification of these parameters.

Press the icon to access the machine parameters.

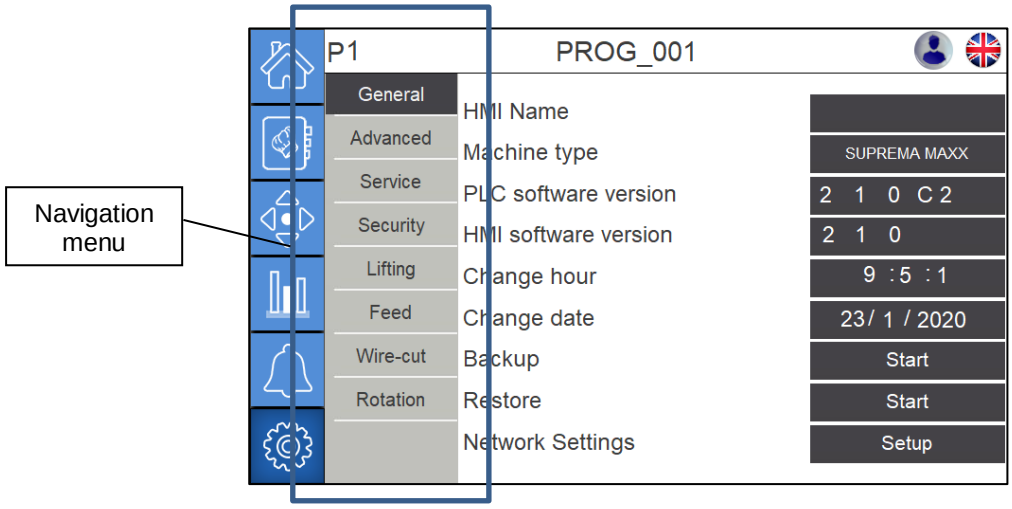

7.1.1. LANGUAGE SETTING

To set the touchscreen language press any time the flag shaped icon located at the top right
A frame where to select the desired language will come up

7.1.2. DESCRIPTION OF THE MACHINE PARAMETERS

GENERAL	
Parameter	**Description**
HMI Name	Identification name of the touchscreen device. During the test-run it is initialized with the machine serial number.
Machine type	Machine model set on the PLC.
PLC software version	Software version installed on the PLC.
HMI software version	Software version installed on the touchscreen panel.
Change hour	To set the time on the touchscreen.
Change date	To set the date on the touchscreen.
Backup	Starts the procedure for saving the parameters on the USB flash drive. For more information please refer to the paragraph “Back-up/Restore”.
Restore	Starts the procedure for restoring the previously saved parameters. For more information please refer to the paragraph “Back-up/Restore”.
Network settings	Allows to verify or modify the network connection addresses of the machine.

STATISTICS	
Parameter	**Description**
Number of dosages (Partial)	Number of dosages made after resetting the data. To reset the data, hold the "R" icon for at least 2 seconds. Only a user of "ADVANCED" or higher level can perform the reset.
Number of trays (Partial)	Number of trays made after resetting the data. To reset the data, hold the "R" icon for at least 2 seconds. Only a user of "ADVANCED" or higher level can perform the reset.
Working time (Partial)	Working time of the machine made after resetting the data. To reset the data, hold the "R" icon for at least 2 seconds. Only a user of "ADVANCED" or higher level can perform the reset.
Number of dosages (Total)	Number of dosages made after resetting the data. To reset the data, hold the "R" icon for at least 2 seconds. Only a user of "SELLER" or higher level can perform the reset.
Number of trays (Total)	Number of trays made after resetting the data. To reset the data, hold the "R" icon for at least 2 seconds. Only a user of "SELLER" or higher level can perform the reset.
Working time (Total)	Working time of the machine made after resetting the data. To reset the data, hold the "R" icon for at least 2 seconds. Only a user of "SELLER" or higher level can perform the reset.

ADVANCED	
Parameter	**Description**
Reset PLC & HMI	It is used for cancelling the memory both from the PLC and the touchscreen, bringing them back to the original status.
Service	Access allowed only to a vendor level user, it allows to make advanced modifications to the SERVICE page.
Manage tray presence sensor	Allows to disable the operation of the tray presence sensor.
Demo mode enable	Enables the machine operation in DEMO mode, that is to say with variations of the program after each tray.
Programs running in demo mode	Selects the programs' interval to carry out while in the DEMO mode.
Modbus dropping inverter	Allows to enable (ON) or disable (OFF) the Modbus protocol management of the respective inverter through the touchscreen. It can be used temporarily in case a malfunction of the communication port of an inverter occurred. Useful to guarantee operation continuity of the machine till the inverter is replaced.
Modbus lifting system inverter	
Modbus wire-cut inverter	
Modbus lifting cam inverter	

SERVICE	
Parameter	**Description**
VNC	Enables the HMI remote connection.
Password	Password to enter after starting the HMI remote connection.
Teleservice	Starts the remote-assistance mode.

SECURITY	
Parameter	**Description**
Autologin	Selects what basic user is initialized at the machine switch-on.
User session expired	Sets the user's session duration after which the user set in the automatic login parameter is re-initialized.

LIFTING	
Parameter	**Description**
Encoder coefficient	Number of encoder pulses for each unit of displacement.
Maximum encoder pulses	Maximum number of encoder pulses per unit of time.
Minimum lifting distance	Minimum settable value of the *Table distance* parameter.
Maximum stroke	Maximum stroke of the lifting system.
Pump head offset	Distance (in height) between the pump type head and the *machine zero.*
Roller head offset	Distance (in height) between the roller type head and the *machine zero.*

FEED	
Parameter	**Description**
Encoder coefficient	Number of encoder pulses for each unit of displacement.
Maximum encoder pulses	Maximum number of encoder pulses per unit of time.
Roller head offset (forward)	Distance between the tray edge and the centre of the mould at tray detecting when the pump type dosing unit is being used and the running direction is set at *Forward.*
Pump head offset (forward)	Distance between the tray edge and the centre of the mould at tray detecting when the roller type dosing unit is being used and the running direction is set at *Forward.*
Roller head offset (backwards)	Distance between the tray edge and the centre of the mould at tray detecting when the pump type dosing unit is being used and the running direction is set at *Backward.*
Pump head offset (backwards)	Distance between the tray edge and the centre of the mould at tray detecting when the roller type dosing unit is being used and the running direction is set at *Backward.*
Tray loading speed	Speed of the belt conveyor while waiting for the tray at work starting.
Scrape speed	Belt conveyor speed during the *Scrape* movement.
Tray stopping space	The machine ends production if the entry of a new tray is not detected within the set distance.
Automatic start on hold	With a value different from zero, it indicates the lapse of time during which the machine pauses at the end of a tray before starting the feed again and wait for a new tray to arrive.
Tray length	Default tray length when creating a new program.
Encoder coefficient calculation	Starts the procedure for an automatic calculation of the encoder coefficient.

WIRE-CUT	
Parameter	**Description**
Maximum wire-cut stop delay	Maximum waiting time before the wire cutting system stop command is sent.
Critical speed #1	Wire cutting speed below which the maximum delay in sending, the stop command is applied.
Critical speed #2	Wire cutting speed above which the stop command is sent without applying any delay.
Wire-cut die offset pump	Distance (in height) between the pump type head and the *machine zero.*
Wire-cut die offset roller	Distance (in height) between the roller type head and the *machine zero.*
Minimum lifting distance	Minimum settable value of the Table distance parameter in wire-cut product.

ROTATION	
Parameter	**Description**
Lap pulses of slow spindle	Number of pulses the nozzle rotation drive card sends to the PLC for each turn of the slow reducer spindle.
Revolutions per minute of slow spindle	Maximum number of revolutions the slow reducer spindles makes in a minute.
Teeth number on machine sprocket	Number of teeth of the gear assembled to the reducer.

7.2. DIAGNOSTICS SCREEN

Pressing on the icon  one can access the technical visualization page.
This page shows the status of inputs and outputs of the line's control electronics.
Please refer to the wiring diagram.

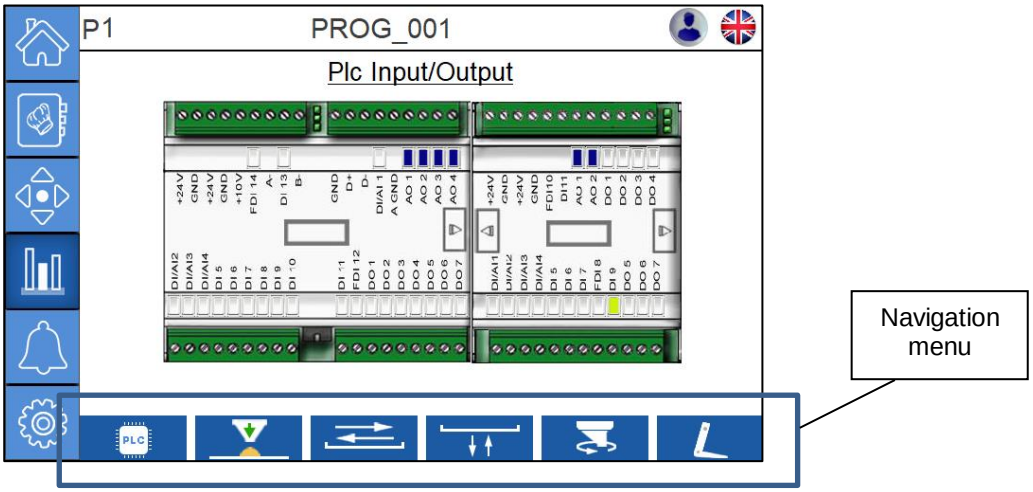

Name	Icon	Description
Input/output PLC		Pressing the icon, you will go to the plc inputs and outputs diagnostic page.
Dosage		Pressing the icon, you will go to the dosing inverter diagnostic page.
Advancement		Pressing the icon, you will go to the diagnostic page of the advancement motor drive.
Lifting		Pressing the icon, you will go to the lifting inverter diagnostic page.
Rotation		Pressing the icon, you will go to the diagnostic page of the nozzles' rotation motor drive.
Wire-cutting		Pressing the icon, you will go to the wire-cutting inverter diagnostic page.

7.2.1. PLC'S INPUTS AND OUTPUTS

From the first frame of the technical video one can check the PLC's inputs and outputs.
Please refer to the machine's wiring diagram to find the meaning of each input and output.

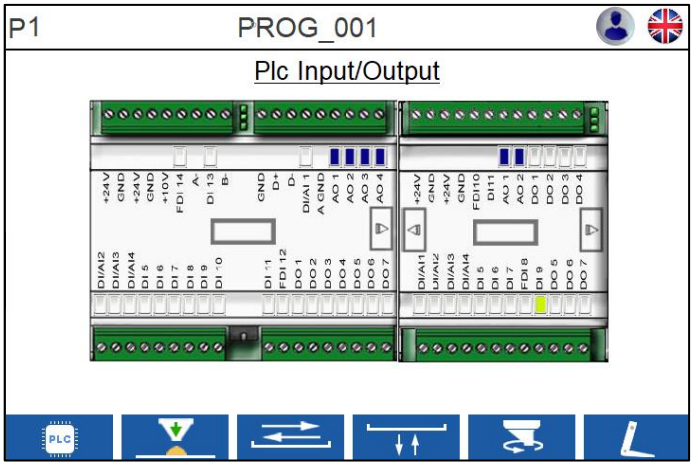

Name	Icon	Description
PLC Inputs		Input not present
		Input present
PLC Outputs		Output not active
		Output active

7.2.2. DOSING MOTOR

This page shows the status of the dosing unit inverters
Please refer to the machine's wiring diagram to find the meaning of each input.

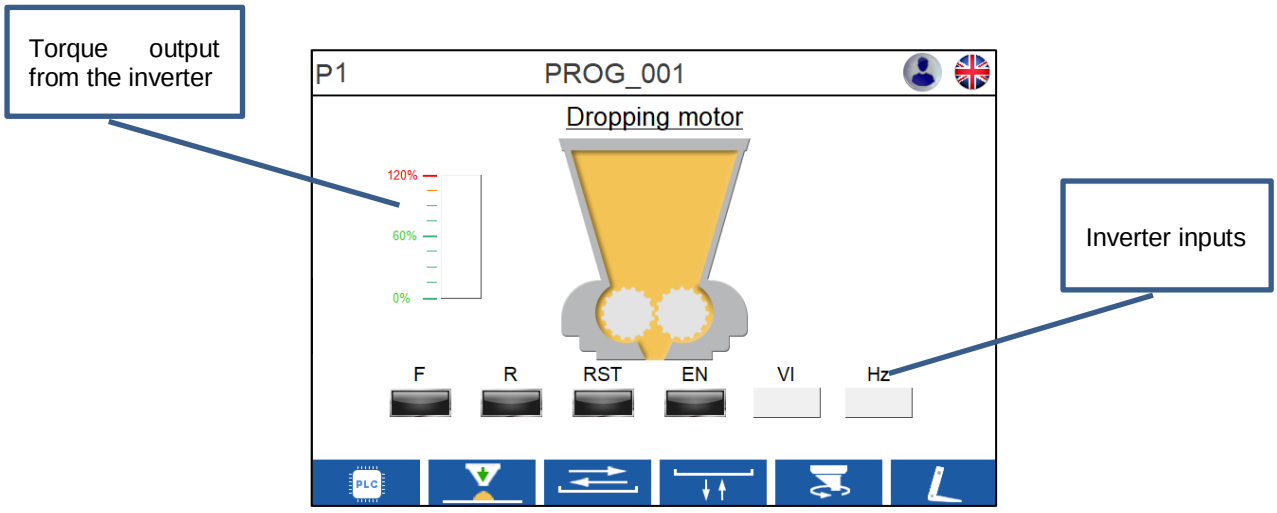

Name	Symbol	Description
Digital inputs	**F**	Forward input.
	R	Reverse input.
	S1	S1 input, reset inverter.
	S2	S2 input, inverter enable.
Analog inputs	**VI**	Inverter analog input, through which the PLC regulates the rotation speed of the motor. Expressed in Volt.
Output frequency	**Hz**	Inverter output frequency. Expressed in Hertz.

7.2.3. CONVEYOR ADVANCE MOTOR

This page shows the management of the feed motor.
Please refer to the machine's wiring diagram for further information.

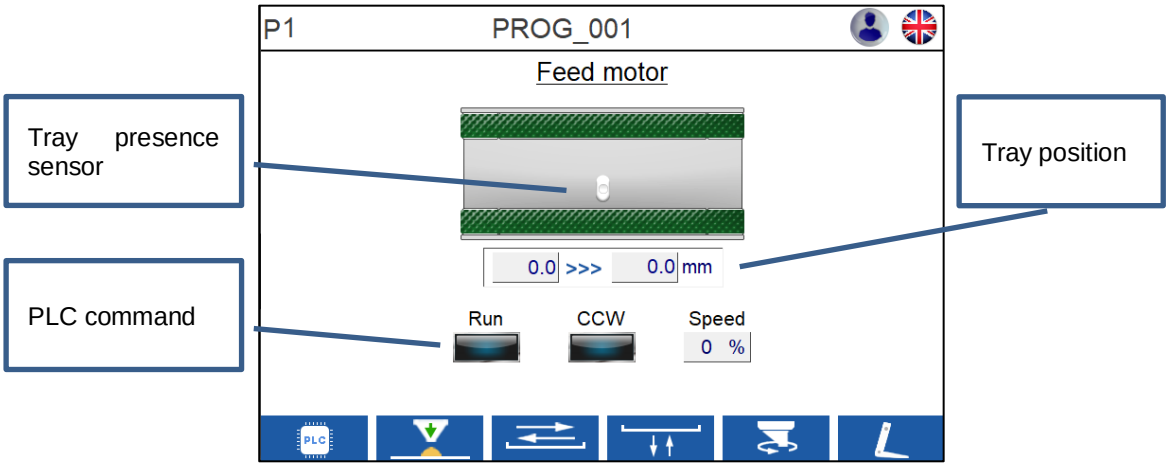

Name	Symbol	Description
Digital output	**Run**	Run control from the PLC to the feed motor drive card Necessary for the movement.
	CCW	Direction control from the PLC to the feed motor drive card. If present, the motor turns counter-clockwise.
Analog output	**Speed**	PLC's analog output through which the motor rotation speed is adjusted. Value expressed as a percentage (0=0Vdc, 100=10Vdc)
Tray presence sensor		The PLC is not detecting any trays.
		The PLC is detecting the presence of a tray.

Tray position indicator:

- The first digit indicates the encoder quota the PLC reads; after this reading, the tray position is expressed in millimetres.
- The second digit indicates the next position the conveyor must reach according to the chosen working cycle. Also in this case the quota is expressed in millimetres.

7.2.4. LIFTING MOTOR

This page shows the status of the lifting motor inverter.
Please refer to the wiring diagram for the meaning of each input.

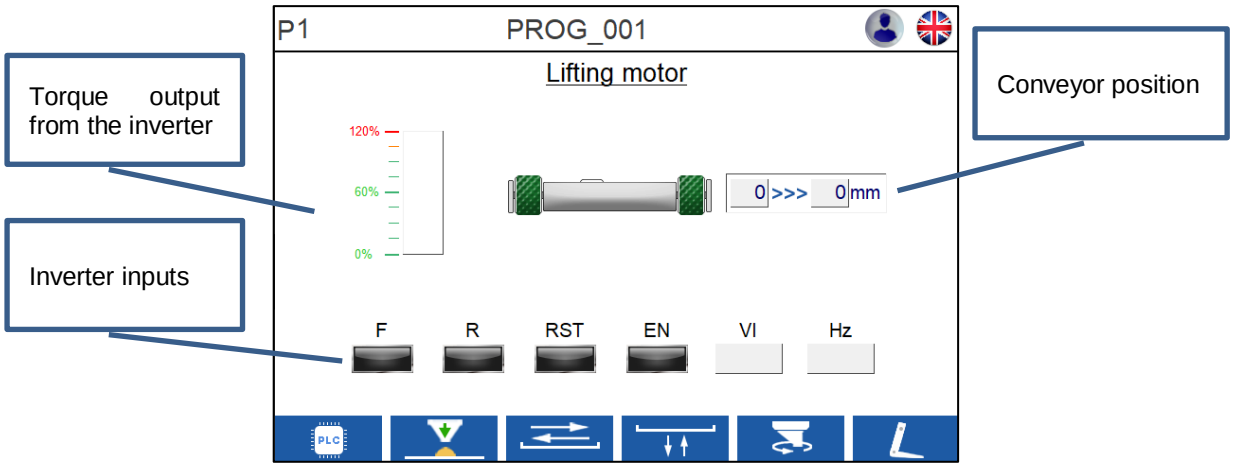

Name	Symbol	Description
Digital inputs	**F**	Forward input.
	R	Reverse input.
	S1	S1 input, reset inverter.
	S2	S2 input, inverter enable.
Analog inputs	**VI**	Inverter analog input, through which the PLC regulates the rotation speed of the motor. Expressed in Volt.
Output frequency	**Hz**	Inverter output frequency. Expressed in Hertz.

Table position indicator:

- The first digit indicates the encoder quota the PLC reads; after the zeroing phase it indicates the position of the machine table as to the standard nozzles expressed in millimetres.
- The second digit indicates the next position the machine table must reach according to the selected working cycle. Also in this case the quota is expressed in millimetres.

7.2.5. NOZZLES ROTATION MOTOR

This page shows the management of the nozzle rotation motor.
Please refer to the machine's wiring diagram for further information.

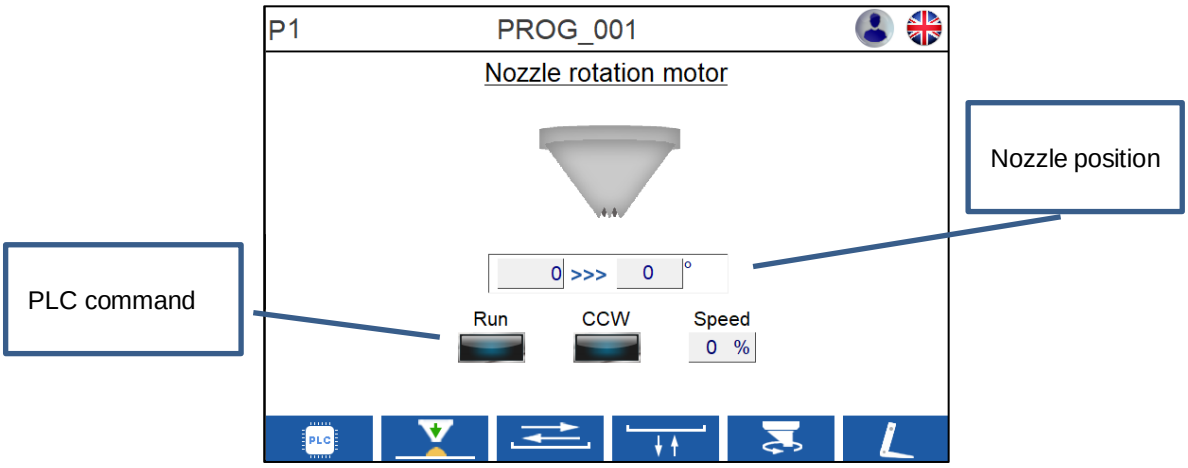

Name	Symbol	Description
Digital outputs	**Run**	Run control from the PLC to the nozzle rotation motor drive card. Necessary for the movement.
	CCW	Direction control from the PLC to the nozzle rotation motor drive card. If present, the motor turns counter-clockwise.
Analog outputs	**Speed**	PLC's analog output through which the motor rotation speed is adjusted. Value expressed as a percentage (0=0Vdc, 100=10Vdc)

Nozzle position indicator:

- The first digit indicates the encoder quota the PLC reads; the value is expressed in degrees (°)
- The second digit indicates the next position the nozzles must reach according to the chosen working cycle. Also in this case the quota is expressed in degrees (°).

7.2.6. WIRE-CUTTING MOTOR

This page shows the status of the wire-cut device inverter.
Please refer to the machine's wiring diagram for the meaning of each input.

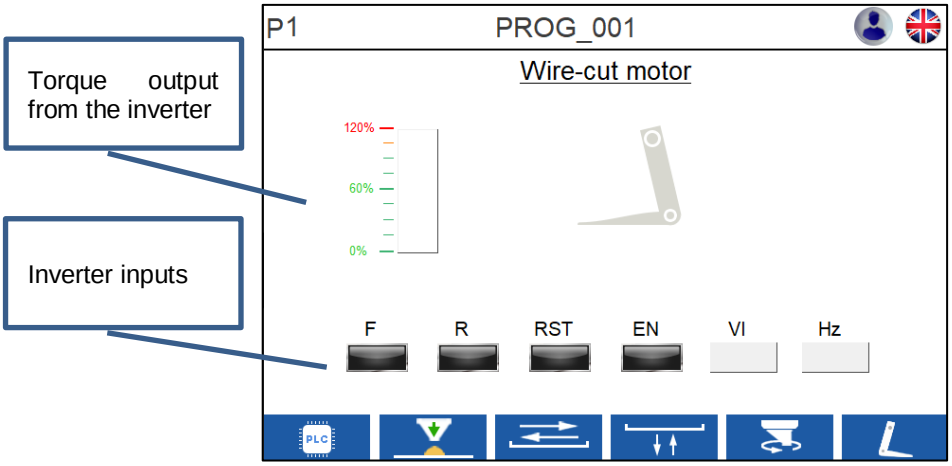

Name	Symbol	Description
Digital inputs	**F**	Forward input.
	R	Reverse input.
	S1	S1 input, reset inverter.
	S2	S2 input, inverter enable.
Analog inputs	**VI**	Inverter analog input, through which the PLC regulates the rotation speed of the motor. Expressed in Volt.
Output frequency	**Hz**	Inverter output frequency. Expressed in Hertz.

7.3. ALARMS AND SIGNALS

Accessing the alarm page in standard conditions, while no alarms or warnings are active, one can display a list showing the history of messages and alarms, with indication of the time the PLC detected the signal.
Press CLOSE to exit this page and move to the previous one.

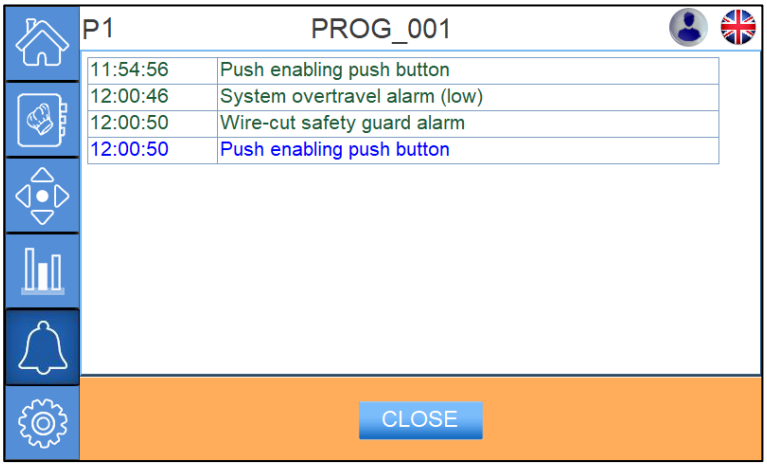

When an alarm intervenes, the alarm icon starts flashing. When this happens while accessing the alarm page, a full list of the alarms active at that time on the machine appears.
Press the RESET button to restore the alarm situation and cancel the alarm displayed on the screen.
Press CLOSE to exit this page and move to the previous one.

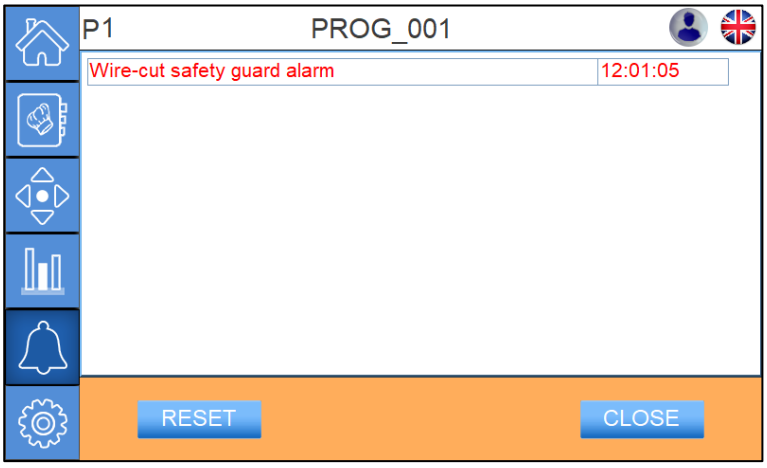

Visual signals activate automatically in case of alarms or warnings.

Name	Icon	Description
Normal state		Non-flashing blue icon: no active alarm.
Presence of alarms		Red flashing icon: one or more alarms are active
Presence of warnings		Yellow flashing icon: the active alarms do not prevent the machine operation, but block the functioning of specific options.

The indications that follow are an aid for identifying and possibly eliminating the causes of machine faults or problems. Remember, however, that the electric and electronic equipment can only be repaired by qualified and authorized technicians. Repairs carried out incorrectly can create risks to user safety and undermine good machine operation.

Message	Causes, checks and possible solutions
Conveyor encoder malfunction	The PLC is not receiving any count from the encoder. Check encoder operation. Make sure the connection between the PLC and the drive, or between the PLC and the inverter, is correct.
Conveyor drive alarm	A mechanical block has occurred. The drive is faulty. Make sure all the mechanical components can move freely. Check drive and motor operation.
Conveyor motor timeout	The final position was not reached within the established lapse of time. Make sure all the mechanical components can move freely. Check drive and motor operation.
Conveyor overrun	The belt conveyor has stopped beyond the pre-set position.
Dropping inverter alarm [error details]	A mechanical block has occurred. An inverter malfunction has occurred. There is no communication between the inverter and the PLC. Make sure all the mechanical components can move freely. Check the connection between the inverter and the PLC. With the error description visible, consult the inverter instruction manual supplied with the machine for more information.
Emergency button pressed down	The emergency stop push-button has been pressed. Release the emergency stop push-button.
Hopper safety guard alarm	The guard is open or was not closed correctly. The safety micro-switch is not operating correctly. Close the guard. Make sure there are no obstructions that prevent the guard from closing. Check safety micro-switch operation and connection.
Inverter malfunction	The cause of the inverter alarm state has not been found. Make sure the connection between the inverter and the PLC is correct.
Nozzle drive alarm	The rotary mould is not inserted correctly. The mould is dirty. The dough being used is too hard. Make sure the rotary mould has been inserted correctly. Clean the rotary mould thoroughly. Soften the dough.
Pause	The machine is paused. Press the start push-button to begin production. Press the stop push-button to reset the work cycle.

Message	Causes, checks and possible solutions
Photocell alarm	The photocell beam has been interrupted. The reflector is dirty or worn out. The photocell is dirty or positioned incorrectly. The photocell is worn out or positioned incorrectly. Make sure there are no objects between the photocell and its reflector. Clean or replace the reflector. Clean the photocell. Make sure the photocell and the reflector are aligned. Check photocell operation and connection.
Push enabling push button	The machine is waiting for the enabling push-button to be pressed.
Push Start	The machine is waiting for the start push-button to be pressed.
Safety circuit malfunction	The cause that brought the machine to a halt in an emergency state has not been found. Check guards, photocells and emergency stop push-button operation.
Slave module communication timeout	One or more expansion modules has/have not been detected within the established lapsed of time. Make sure all the expansion modules are properly connected.
Table encoder malfunction	The PLC is not receiving any count from the encoder. Check that the encoder operation is correct. Make sure the connection between the PLC and the drive, or between the PLC and the inverter, is correct.
Table inverter alarm [error details]	A mechanical block has occurred. An inverter malfunction has occurred. There is no communication between the inverter and the PLC. Make sure all the mechanical components can move freely. Check the connection between the inverter and the PLC. With the error description visible, consult the inverter instruction manual supplied with the machine for more information.
Table motor timeout	The final position was not reached within the established lapse of time. Make sure all the mechanical components can move freely. Check drive and motor operation.
Table overrun	The table has stopped beyond the pre-set position.
Table overtravel alarm (top/bottom)	The table has gone beyond the permitted minimum or maximum quota. Place the table back into its work position, following the instructions given in the next paragraph.
Table pre-set…	Table pre-set in progress
Tray absence alarm	The tray is not detected by the sensor during the work cycle. Make sure the tray is perfectly flat. Check tray sensor operation.
Tray malfunction alarm	A problem has occurred during tray detection. Make sure the tray is perfectly flat. Check tray sensor operation.
Tray timeout	No tray was detected within 60 seconds from production starting. Start production and insert a tray within 60 seconds.

Message	Causes, checks and possible solutions
Wire-cut inverter alarm [error details]	A mechanical block has occurred. An inverter malfunction has occurred. There is no communication between the inverter and the PLC. Make sure all the mechanical components can move freely. Check the connection between the inverter and the PLC. With the error description visible, consult the inverter instruction manual supplied with the machine for more information.
Wire-cut motor timeout	The final position was not reached within the established lapse of time. Check wire cutting device operation. Check wire cutting device end cycle sensor operation.
Wire-cut safety guard alarm	The guard is open or was not closed correctly. The safety micro is not operating correctly. Close the guard. Make sure there are no obstructions that prevent the guard from closing. Check safety micro operation and connection.

Press the stop push-button to reset the alarm situation and cancel the message shown on the screen.
If the alarm persists, contact servicing.

7.3.1. TABLE OVERTRAVEL ALARM: RESETTING INSTRUCTIONS

- Press the  icon to access the manual movements page.
- Press the enable push-button.
- Identify the *Lifting* field.
- If the "Table overtravel alarm (top)" cuts in, press the icon  together with the start push-button.
- If the "Table overtravel alarm (bottom)" cuts in, press the icon  together with the start push-button.
- Keep the icon and the start push-button pressed until the alarm message disappears from the notification area.

8. CLEANING

8.1. GENERAL INFORMATION

Operators in charge of cleaning must wear hygienically sterile protective clothing that covers all parts of the body.
Cleaning and hygenisation must be carried out in a room that is equipped in compliance with current hygiene regulations.



Do not use cutting tools, knives, scrapers, etc. unless it's specifically indicated.



We advise using hot water (50 °C), and avoiding where possible the use of detergents and degreasing agents; carefully dry each component after cleaning. Washing the die elements at high temperatures is not recommended.
MIMAC ITALIA is not liable for any damage and/or deformation that may be caused by temperatures above 50 °C. If parts are washed in a part washer, wait until they cool or cool them manually under cold running water.

8.1.1. FOOD HYGIENE REQUIREMENTS

The machine indicated in this manual is, legally, suitable for working with food at the date on which it is delivered by the Manufacturer. It only remains suitable in time if care is taken with cleaning, which must be carried out daily, and with machine maintenance and checks. Any machine part that comes into contact with an item of food (dough, flour, water, margarine, etc.) has to be replaced if it appears altered, worn out or if it is no longer suitable for the correct and hygienic treatment of food.
The Manufacturer is not liable for any damage caused if the machine is not cleaned, or if it is cleaned incorrectly, and/or if maintenance is not carried out or is carried out incorrectly.

8.1.2. CLEANING OF PARTS WHICH DO NOT COME INTO CONTACT WITH FOOD

Frame, panels and in general all visible parts that do not come into direct contact with the product should be cleaned daily at the end of the working day using a cloth and a degreasing and sanitizing detergent.
These operations can be carried out by unqualified staff, who nevertheless must be familiar with the possible residual risks and with the cleaning methods.



Do not use water jets to clean the machine.

To clean steel surfaces use water or denatured alcohol, rub with a clean cloth, then pass over the cleaned area with a jet of compressed air or a dry cloth.
To clean the control panel, touchscreen included, use a soft and dry cloth.
If it is necessary to clean electric or electronic parts use only a vacuum cleaner. Do not use compressed air and/or water for any reason.

8.1.3. CLEANING OF PARTS WHICH COME INTO CONTACT WITH FOOD

A daily, thorough cleaning is mandatory, at the end of the work shift; this frequency is necessary because batter and other products for filling can go off within a short period of time.
Cleaning operations, which require removal of parts, must only be carried out by qualified and authorized technicians.
Unless otherwise indicated, cleaning must be carried out with the machine stopped and disconnected from the mains.

8.2. STATIONARY MOULD DISASSEMBLING AND CLEANING

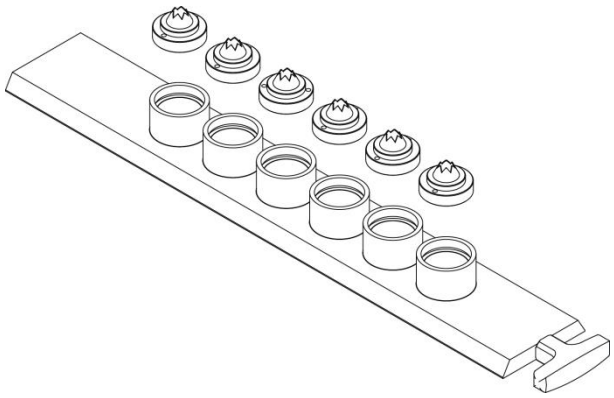

Wash the die thoroughly after every work change proceeding as follows:

16. Loosen the gib stop nuts and slip the mould out.
17. Unscrew all nozzles from the mould using the supplied tool
18. Clean the nozzles in all their parts.
19. Clean the mould in all its parts.
20. Dry and wait for the die and nozzles to cool down.

8.3. ROTARY MOULD DISASSEMBLING AND CLEANING

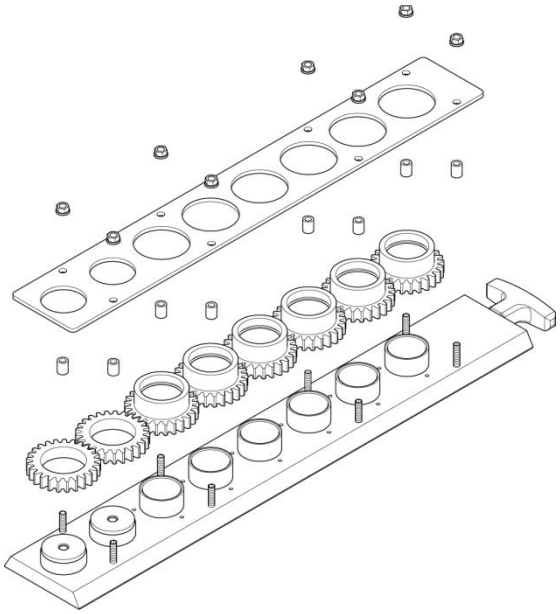

Wash the rotary mould thoroughly before starting any new process following the following steps:

1. Loosen the gib nuts and slip the mould out
2. Unscrew all nozzles from the die using the supplied tool
3. After unscrewing the blocking nuts, remove the upper plate
4. Remove the spacers
5. Remove the gears
6. Clean the nozzles thoroughly
7. Clean each one of the mould components
8. Dry and wait for all parts to cool down

8.4. ROLLER TYPE DOSING UNIT DISASSEMBLING AND CLEANING

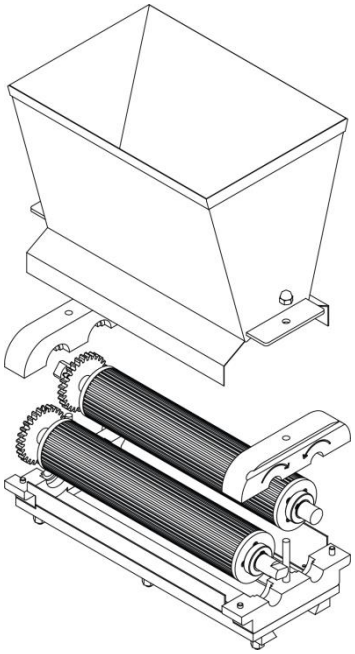

1. Remove the front guard after removing the blocking nuts.
2. Lift the hopper guard.
3. Slightly withdraw the dosing unit.
4. Lift and remove the hopper after unscrewing the locking nuts.
5. Remove the upper part of each head support.
6. Delicately remove both rollers.
7. Remove the head from the machine.
8. Carefully wash all components using hot water.
9. Before reassembling the dosing unit, dry all parts and wait for them to cool down.

8.5. PUMP TYPE DOSING UNIT DISASSEMBLING AND CLEANING

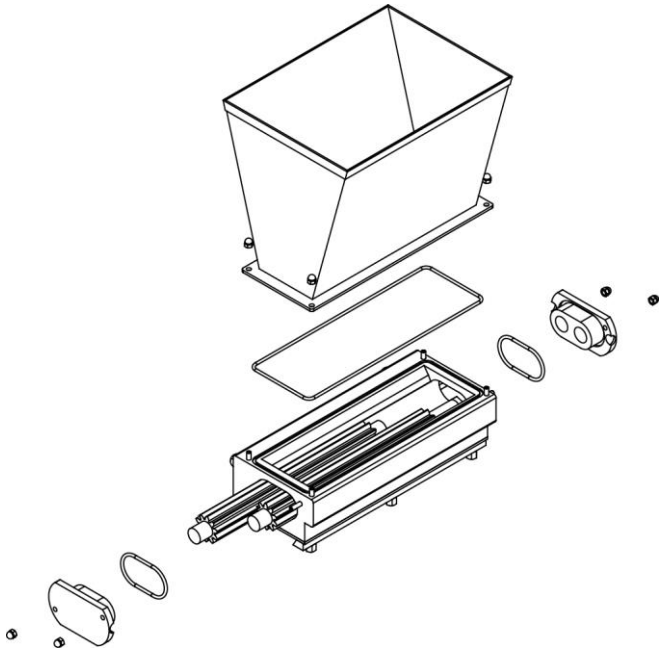

1. Remove the front guard after removing the blocking nuts.
2. Lift the hopper guard.
3. Slightly withdraw the dosing unit.
4. Lift and remove the hopper after removing the locking nuts.
5. Loosen the locking nuts, remove the front cover of the cavity of the rollers and remove the gasket
6. Delicately remove both rollers.
7. Remove the head from the machine.
8. Remove the back cover of the cavity of the rollers after removing the fixing screws and remove the gasket.
9. Carefully wash all components using hot water.
10. Before reassembling the dosing unit, dry all parts and wait for them to cool down.

9. MAINTENANCE

9.1. GENERAL INFORMATION

Maintenance operations must only be carried out by qualified and authorized technicians only.
Unless otherwise indicated, maintenance must be carried out with the machine stopped and disconnected from the mains (machine in a safety condition).
If it is necessary to start the machine with the guards removed to make maintenance/adjustment the technician must keep unauthorized persons away.
Before starting maintenance, a sign with “MAINTENANCE BEING CARRIED OUT” must be exposed.
Wear goggles and mask when using compressed air for cleaning, and do not direct the jet towards skin or eyes.
Use gloves and goggles when handling detergents or lubricants.
Do not dispose of liquid lubricants in the environment. Dispose of toxic substances using the regular recovery channels made available by the local administration.
After any pertinent activity and before preparing the machine for operation, the maintenance technician must:

- make sure there are no foreign bodies inside the machine;
- restore safety devices and/or guards that may have been removed during maintenance;
- make sure the mobile guards and relative alarms work correctly.

9.2. SUBJECT TO WEAR PARTS

In the machine all those parts that move or undergo friction are subject to mechanical wear. By way of example parts subject to wear are gaskets, bearings, conveyor belts, safety microswitch and gears.

9.3. STANDARD MAINTENANCE

Routine maintenance program includes inspections, checks and verifications that can be carried out directly by the operator and/or by people in charge of normal company maintenance.
Usually routine maintenance operations can be performed without using specific instruments or tools.
Routine maintenance includes:

- general visual check of the integrity of the machine;
- testing of the machine functioning (motor, push-buttons and safety devices);
- checking the correct assembly and fixing of the equipment;
- cleaning wastes deriving from work process.

9.4. SPECIAL MAINTENANCE

Special maintenance program includes replacement, adjustment and lubrication operations carried out by trained technicians in order to avoid irregularities and malfunctions.
As a rule special maintenance operations can be performed using specific instruments or tools.
Special maintenance includes:

- checking the machine efficiency;
- lubrication of moving parts;
- cleaning of the electrical system.

9.5. MAINTENANCE OF ELECTRICAL AND ELECTRONIC DEVICES

Usually neither ordinary nor special maintenance operation are required on electrical and electronic devices.
Should it be necessary to perform any maintenance work on electrical or electronic equipment, including engines, gearboxes and motors, this must be done by trained people that have technical skills and are aware of all the regulations in order to carry out all operations properly.

9.6. SPARE PARTS REQUEST

To request spare parts, please contact the customer service by communicating all the information about the machine (serial number, model name, year of manufacture) and the code of spare parts needed referring to the tables attached to this manual.

9.7. STORAGE

If for some reason it is necessary to store the machine with or without its packaging, proceed as follows.

- Place the crates in a covered area and protect them against humidity, dust and heat sources; also make sure the area is not subject to jumps in temperature.
- Make sure that the movement means inside the premises cannot come into accidental contact with the machinery.
- Periodically check the protected parts.
- Never stack the cases one on top of the other.
- If the machine is not packed, keep it lifted from the ground using pieces of wood and cover it with sheets to prevent dust and dirt from accumulating.

9.8. DISMANTLING AND DISPOSAL

In compliance with art. 13 of Italian Legislative Decree no. 151 dated 25 July 2005 Actuation of Directives 2002/95/EC, 2002/09/EC and 2003/108/EC regarding reduction in the use of dangerous substances in electric and electronic apparatus and the elimination of refuse", the symbol of the barred waste container that can be found on the apparatus or on the packaging means that the product, at the end of its lifetime, must be separated from other waste.

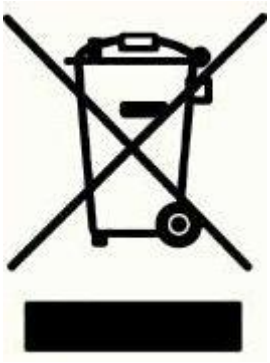

The separate collection of this apparatus when it has reached the end of its lifetime is organized and managed by the Manufacturer. Users who wish to dispose of this apparatus must personally contact the Manufacturer and follow the system used by same for the separate collection of the apparatus when it has reached the end of its lifetime.
Separating waste correctly helps avoid possible negative effects on the environment and health, and encourages the reuse and/or recycling of the materials used to produce the apparatus.
Administrative sanctions foreseen by the laws in force are applied to holders who dispose of the product in an unlawful manner.