~~Designed & Manufactured in compliance with latest AS 1668.2-2024 Standard~~

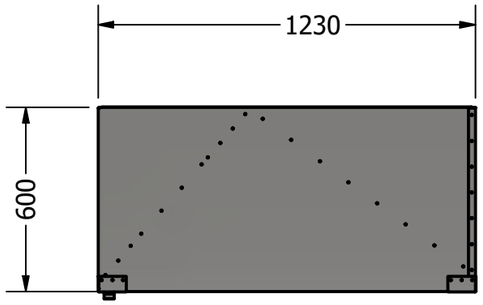

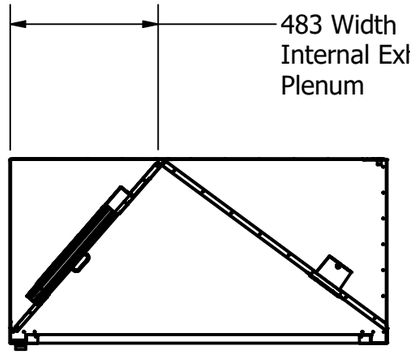

Sec a-a

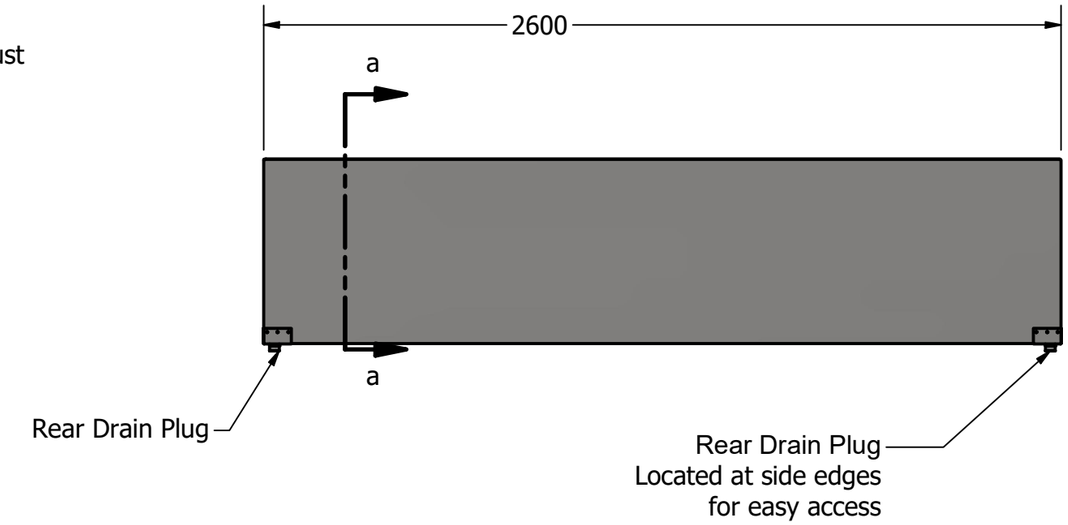

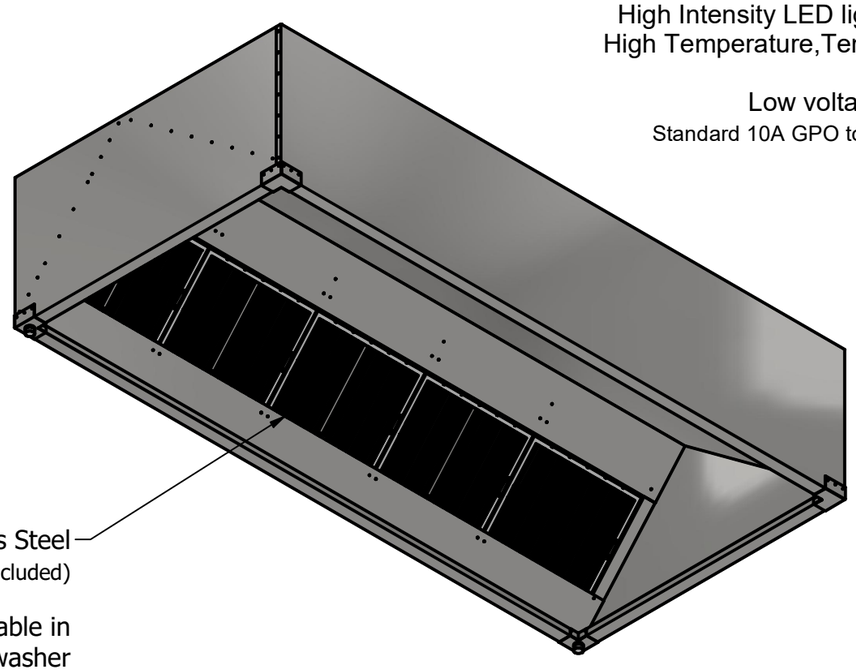

High Intensity LED light modules. IP67 rated.
High Temperature,Tempered Glass protectors

Low voltage LED Driver provided.
Standard 10A GPO to be provided above Canopy.

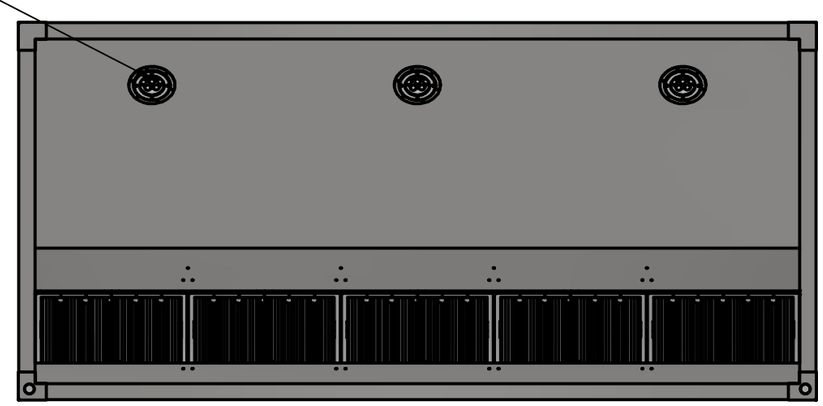

Approx Canopy Weight - 90 kg

NOTE. Standard Xtracta models do not have provision for integrated return air handling. Return air must be provided by other means into the facility as required.

All Dimensions are in millimetres - mm

Xtracta® Exhaust Canopy Solutions

CHEFS DEPOT Culinary Supplies

PROJECT: Xtracta - 2024				
DWG NO: **Xtracta 2024 - 26_1230**				
SIZE: **A3**	SCALE: **DNS**	SHEET: **1**	DATE: **26/02/2025**	REV: **2**