REVISION 05/2024

Spec sheet

CHEFS DEPOT
Culinary Supplies

Invoq | Hybrid 20-1/1 GN



HOUNÖ

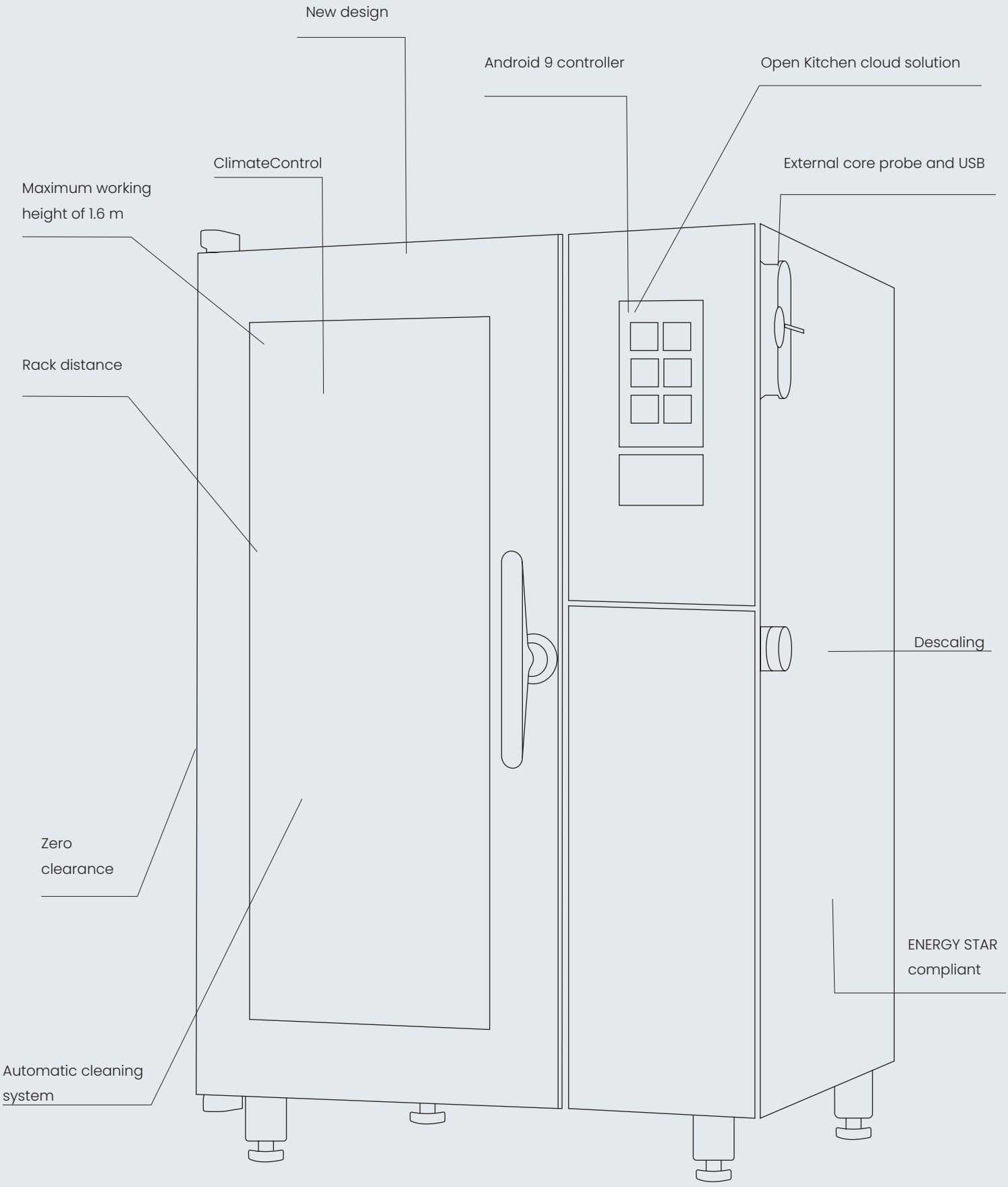
New design
Android 9 controller
Open Kitchen cloud solution
ClimateControl
External core probe and USB
Maximum working height of 1.6 m
Rack distance
Descaling
Zero clearance
ENERGY STAR compliant
Automatic cleaning system

A whole new oven experience

The Invoq Hybrid is the perfect kitchen appliance, where all the latest technologies have been made simple for you to use.
The 20-1/1 GN model offers a combination of an energy-efficient boiler with an injection steam system. Together with smart sensors and integrated drain and inlet systems the oven delivers fast, efficient and safe high-density steam saturation – perfect for intensive steaming production. The roll-in system gives you safe and efficient operation for increased productivity, as well as good ergonomics with a maximum working height of 160cm.
The steam production and the automated cleaning system are controlled to utilise a minimum amount of energy and water without ever compromising quality results.

CAPACITY

- 1/1 GN
- 20 trays with 65 mm runners
- Maximum working height of 1.6 m
- 4.5 kg maximum food load per tray
- 90 kg maximum food load per oven

Intelligence at the tip of your finger...

ClimateControl

ClimateControl ensures best-in-class performance, controlling the air, heat and humidity levels.
It optimises processes and even shortens cooking times. The result is consistent uniformity and predictably high quality.

CareCycle

Select between seven different cycles from Light to Intense, Turbo or Eco. The Invoq oven guides you through the process and suggests the optimal cleaning program and required amount of cleaning tablets for the desired cycle. This ensures that the ratio of detergent to water is always correct and you avoid overconsumption.

MenuPlanner

MenuPlanner allows you to cook many different items, unsupervised at the same time, using a simple drag and drop interface. Both experienced and inexperienced users will appreciate the automatic notifications that ensure efficient, precise and on-time consistency.

SmartChef

SmartChef helps you learn from the oven to develop your signature style. You select type of food, cooking method and temperature, and SmartChef will automatically guide you to a great result. Afterwards, you can save and, if necessary, edit the formula.

Electricity

Dimensions & weight

Dimensions excl. handle (HxWxD) [mm]	1730 x 937 x 841
Dimensions incl. handle (HxWxD) [mm]	1730 x 937 x 923
Shipping dimensions (HxWxD) [mm]	2050 x 1000 x 1200
Net weight [kg]	288
Shipping weight [kg]	308
Clearance (left, back, right) [mm]	0 x 0 x 40
Maximum working height [mm] with basic stand	1631

Power requirements

Power consumption [kW]	38.2
Convection output [kW]	36
Steam output [kW]	36
Grid supply frequency [Hz]	50/60*
Voltage 400 V 3PN AC	
Pre-fuse [A]	63
RCD model	B/F
Voltage 415 V 3PN AC	
Pre-fuse [A]	63
RCD model	B/F
Voltage 440 V 3PN AC	
Pre-fuse [A]	63
RCD model	B/F

Water requirements

Water connection [inches]	3/4
Drain [mm]	Ø50
Water pressure (min-max) [bar]	1-6
Water flow [l/m]	5.5

Heat emission

Latent heat load [kW]	1.11
Sensible heat output [kW]	2.49

Noise emission

Noise level without hood system [dB(A)]	<65
Noise level with hood system [dB(A)]	<65

IP classification

IPX5

IP class	IPX5

Data

Wi-Fi module	IEEE 802.11 b/g/n
LAN	RJ45

*The oven is built from factory for either 50 Hz or 60 Hz grid supply.
Further technical information can be found in the installation manual.

A	Drain outlet
B	Air outlet (drain)
C	Air intake
F	Ethernet connection
G	Electrical connection
W	Water inlet (HydroShield water filter or reverse osmosis)
X	Water inlet

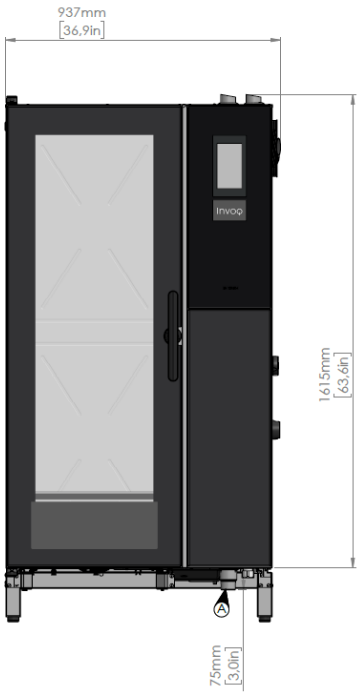



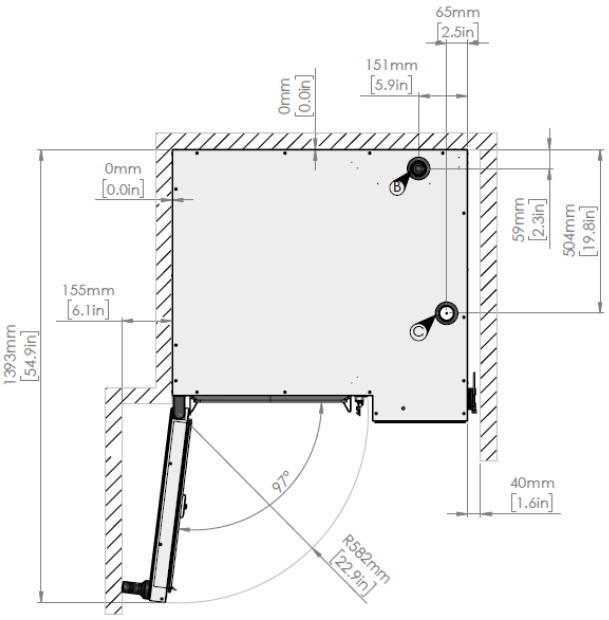

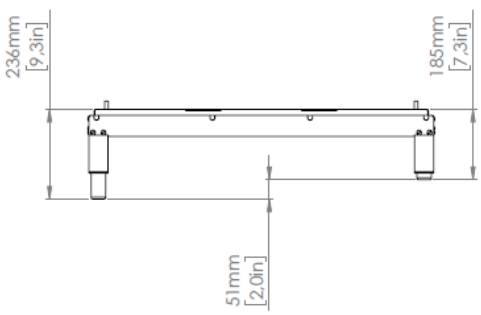

Gas

Dimensions & weight

Dimensions excl. handle (HxWxD) [mm]	1730 x 937 x 841
Dimensions incl. handle (HxWxD) [mm]	1730 x 937 x 923
Shipping dimensions (HxWxD) [mm]	2050 x 1000 x 1200
Net weight [kg]	
Shipping weight [kg]	
Clearance (left, back, right) [mm]	0 x 0 x 40
Maximum working height [mm] with basic stand	1631

Power requirements

Gas consumption [kW]	40
Convection thermal load [kW]	40
Steam thermal load [kW]	36
Grid supply frequency [Hz]	50/60*
Voltage 230 V 1PN AC	
Power consumption [kW]	1.5
Pre-fuse [A]	10
RCD model	B/F
Available gas types [natural/LPG]	G20, G25 / G30, G31

Water requirements

Water connection [inches]	3/4
Drain [mm]	Ø50
Water pressure (min-max) [bar]	1-6
Water flow [l/m]	5.5

Heat emission

Latent heat load [kW]	
Sensible heat output [kW]	

Noise emission

Noise level without hood system [dB(A)]	

IP classification

IPX5

IP class	IPX5

Data

Wi-Fi module	IEEE 802.11 b/g/n
LAN	RJ45

*The oven is built from factory for either 50 Hz or 60 Hz grid supply.
Further technical information can be found in the installation manual.

A	Drain outlet
B	Air outlet (drain)
C	Air intake
D	Gas-generator outlet
E	Gas heat exchanger outlet
F	Ethernet connection
H	Gas connection
W	Water inlet (HydroShield water filter or reverse osmosis)
X	Water inlet

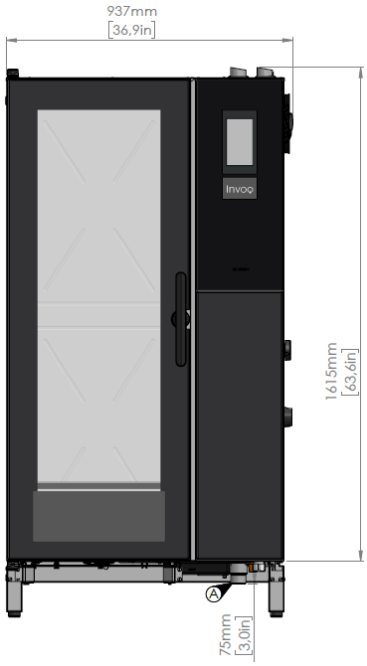

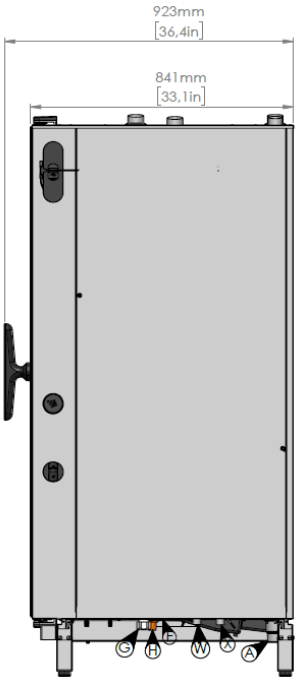

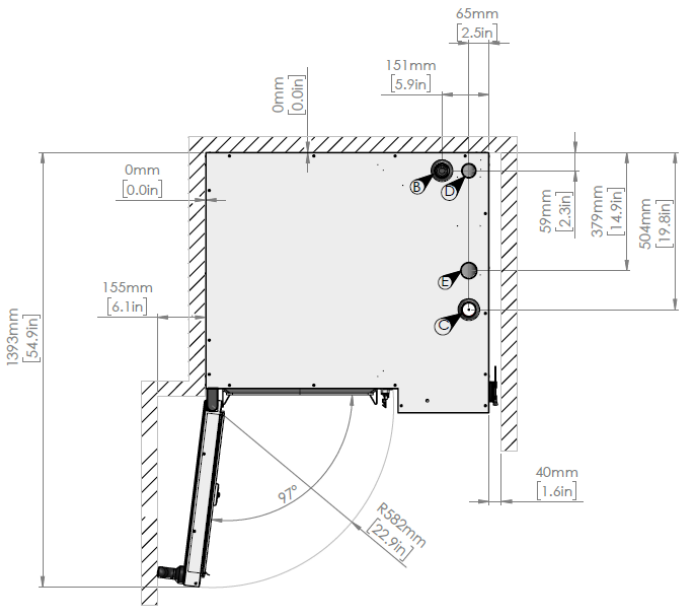

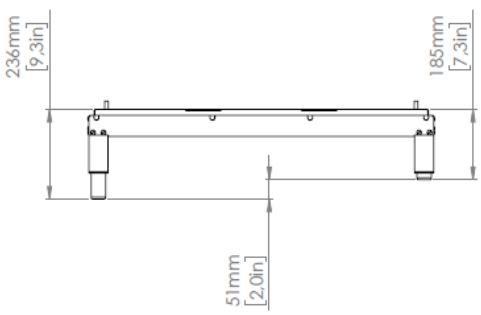

Features

Intelligence

ClimateControl	Optimal cooking environment through control of air, heat, pressure and humidity levels. Reversible fan adjustable with 9 steps (20-100%). Humidity correction accurate to 1/10 of a second.
CareCycle	Fully automatic, recirculating tablet-based cleaning system. System guidance to appropriate cleaning program and required amount of detergent. Organiser to schedule a carefree overnight clean. Automatic rinse after interrupted cleaning cycle.
MenuPlanner	Up to 10 integrated timers for notifications. Software to input and group recipes with drag and drop functionality. Automatic alert to request staggering of loading when grouping up to three specific recipes.
CookTimeCorrection (CTC)	Intelligent sensors detecting unexpected changes in temperature and compensating accordingly.
SmartChef	Intelligent cooking automation selecting the optimal cooking settings.
Humidity control, CombiSense	Percentage-based automatic humidity system for high-temperature cooking maintaining natural moisture, flavour and colour of the product. Sensors supervise and control the Maillard reaction for accurate results.
Humidity control, CombiSpeed	Level-controlled humidity injection for improving low-temperature cooking optimising tenderisation and yield of larger products. 10 different humidity levels.
QSR	QSR, Quick Select Recipes, is a tailored smart user interface allowing recipes as favourites on the home screen. 9 thumbnail recipes per page - up to 9 pages for a total of 81 recipes. Option of locked down user interface to prevent manual operation.
Connectivity, Open Kitchen	Cloud solution for menu management, recipe distribution, preventive maintenance, real-time overview of fleet, food safety documentation and consumption data overview.
Power failure	Automatic restart after power failure allowed up to 30 minutes to ensure finalisation of running programs. Automatic rinse after interrupted cleaning process for safe cooking. User notification of failure occurred and documents via HACCP.

Operation

Convection, temperature range	30-300°C / 85°-572°F 300°C / 572°F possible for 15 minutes, then reducing to 250°C / 480°F for continued run in manual mode.
Steam, temperature range	30-130°C / 85°-265°F HybridSteam combining steam generator and injection for rapid and pure steam for optimal performance even at low temperatures below 100°C / 212°F.
CombiSense, temperature range	30-250°C / 85°-480°F Accurate automatic humidity adjustment.
CombiSpeed, temperature range	30-250°C / 85-480°F CombiSpeed: Power steam adjustable in 10 levels for reduced cooking time and tenderizing products.
Cool down	Rapid cool down function with possibility for doing it with the door open or by use of water.
Proving	Humidity regulated proving function for optimum proving of baked products

Operation

InjectionSteam	In steaming mode, steam is generated by injecting water directly on to the heating elements and circulating it with the fan creating fast and efficient steam.
HybridSteam	In steaming mode, injection steam is combined with energy-efficient steam from the boiler achieving a high-density steam saturation for intensive steaming productions improving functions such as CombiSpeed for faster cooking and Proving (Proofing) for low temperatures.
Steam on demand	Push and hold in manual mode or push and select between 1-30 seconds.
Steam on demand in recipes	Programmable steam on demand between 1-30 seconds. Pause can be added between steps for optimal crust.
Recipes	The oven can hold 1,500 recipes. Each recipe can hold up to 15 different steps. A set of preset recipes are installed on the oven from factory. Recipes can be grouped, e.g. bakery products, Italian cuisine. Choose from icons or photos, available from a preinstalled library, or upload own images. Simple upload or transfer between Invoq ovens via USB or the cloud solution.
Delta-T	Cooking method based on the product's core temperature for gentle preparation tenderising meat and reducing shrinkage.
Cook & Hold	Cooking method using Delta-T as cooking mode until just before the desired temperature is reached after which the temperature is maintained, while automatic humidity control ensures the optimal conditions with a high moisture level and minimum shrinkage.
Temperature probe	External multipoint core temperature probe with accurate sensors. Always at ambient temperature. for easy use. Less exposed to wear and tear.

Safety

Fan wheel brake	Rapid fan stop.
Overheat protection	Overheating protection for convection heat and steam generator.
Contact temperature	Maximum contact temperature of oven door 70°C.
3-pane glass door	Swivelling glass panes with built-in ventilation and energy-optimised coating.
Tablet cleaner and descaler	Tablet-based environmentally conscious cleaner and descaling chemicals for improved work safety.
HACCP	HACCP files are automatically stored for 60 days and can be downloaded in PDF format to ensure food safety documentation. Stored on the oven when not connected. HACCP data includes production time, production duration, preparation temperature and core temperature.
Maximum rack height	Maximum working height of 1.6 m.
Display lock	Ensuring no interruption with operation when cleaning the surface.
IP protection	Protection class IPX5 protecting against water jets from all directions.
Door handle	Two-step safety handle as standard.
Cavity	DIN 1.4301 steel with seamless welding and rounded corners for optimal airflow and cleaning.

Network

USB	Integrated USB interface for software, recipe and HACCP handling.
LAN	Ethernet interface for wired connectivity to Open Kitchen.
Wi-Fi	WLAN upgrade for wireless connectivity to Open Kitchen.
Connectivity	Open Kitchen cloud-based system enabling management of oven fleet and general facility management.

Care

CareCycle	Fully automatic, recirculating tablet-based cleaning system with 7 cycles from Light to Intense, Turbo or Eco. Pressure-dependent system. Turbo cleaning in just 15 minutes. System guidance to appropriate cleaning program and required amount of detergent. Organiser to schedule a carefree overnight clean. Automatic rinse after interrupted cleaning cycle ensuring no chemical residue left in the chamber.
CareCycle Clean tablets	Phosphate-free formula of the detergent for an eco-conscious choice
CareCycle Descale tablets	Descaling of boiler unit and/or cavity for proper cleaning of hard water deposits.
HydroShield	Use carbon filtered water removing lime and gypsum.
3-pane glass door	Swivelling glass panes for easy cleaning.
Hand shower	Hand shower can be an add-on to be located on the side, with separate closing mechanism. The external hand shower is designed with focus on ergonomics and work environment.
External	Easy external clean due to stainless steel and glass surfaces and IPX5 protection.
Connectivity	Monitoring and consumption overview via the Open Kitchen cloud solution.

Comfort

Time format	Adjustable in 24-hour format or am/pm.
Timer start	Customisable automatic timer starts. Allowing the oven to start and/or preheat unsupervised.
Timer modes	HH:MM - MM:SS - continuous time
Display	Digital temperature display adjustable in °C or °F, display of target and actual values.
Fan speed	1 or 2 fan wheels. Reversible fan ensuring uniform results. Optimum distribution of air and steam in oven chamber. Adjustable fan with 9 steps (20-100%); low fan speed - ideal for light/delicate products The fan can be set manually in convection, steaming and regeneration mode. In all other modes, the fan function is set automatically.
Lighting	LED lighting from the door with high illumination of cooking chamber. Energy saving and long life.
Touch display	Fast reacting and intuitive touch display for smooth and easy operation.
User interface	Capacitive 7" TFT colour touch screen with super wide view for optimal viewing angles. Simple and intuitive operation by self explanatory symbols and guidance eases the operation like a smartphone, operated by Android 9. Compatible with Middleby UI for multi devices with same control.
Languages	27 languages preset for operation and trouble shooting.
Cooking methods	7 operating modes and/or 5 cooking modes.
Supervision access	View or change the operating mode.
Customisation	Customise the home screen to allow easier access to favourites, cleaning and MenuPlanner removing the risk of operator errors. Customise notes with alarms to guide staff. Incorporate guidelines to recipes for optimal usage and elimination of errors.

Installation, maintenance & environment

Start widget	Correct and stress-free installation incl. location (sea level) customisation.
Service widget	Correct and easy maintenance incl service diagnosis and self-test functionality.
Fitting	Left- or right-hinged door for optimal ergonomics and kitchen design.
Service access	Easy service access from one side of the oven only.
Water filtration	HydroShield water treatment is recommended for optimal operation. User notification by oven for replacement.
Connectivity	Remote diagnosis and updates with Open Kitchen.
Warranty	Standard warranty or extended according to purchase agreement with distributor.
Maintenance	Regular maintenance is recommended according to the manufacturer's guideline by trained service partners
Energy efficiency	Tested in accordance with ENERGY STAR.
Ambient temperature	Maximum 50°C ambient operation temperature.

Options

	Item number
Right-hinged door 20-1/1 GN (factory-built)	-
Fat Separation System 1/1 GN (factory-built)	104853
Condensation hood 1/1 GN Stackit & 20-1/1 GN	1081132
Marine kit 20-1/1 & 2/1 GN	108118
Special voltage (upon request)	-
Wi-Fi module	108137
Open Kitchen cloud solution	-

CareCycle

	Item number
CareCycle Clean tablets	106032
CareCycle Descale tablets	106033
HydroShield L 3600 Complete	108138
HydroShield XL 6000 Complete	108139
HydroShield L 3600 Replacement filter	30500545
HydroShield XL 6000 Replacement filter	30500546

Trolleys

	Item number
Roll-in trolley 20-1/1 GN 65 mm 20 trays U-shaped	107592
Roll-in trolley 20-1/1 GN 85 mm 15 trays U-shaped	108140
Roll-in trolley 16 EN - 400x600 80 mm 16 trays L-shaped	107591
Roll-in trolley 16 EN - 400x600 95 mm 14 trays L-shaped	108148
Banquetting roll-in trolley 20-1/1 GN (50 plates)	108142
Options for trolleys:	
Thermo cover (1/1 GN)	108149
Holder for trolley handle	108144

Accessories

	Item number
20-1/1 GN power supply cables 3 meter, electric 400 V 3PN AC, 5x2,5 mm^2	108134
All models power supply cables 3 meter, gas 230 V 1PN AC, 3x2,5 mm^2	108136
Installation kit	108127
Heat shield 20-1/1 GN	108124
USB key	108128
IEMS energy management system	108119

GET IN TOUCH.

As your oven specialist, we always do our utmost to help our customers. Worldwide.

HOUNÖ A/S
Alsvej 1
DK-8940 Randers SV
Denmark

T: +45 8711 4711
M: houno@houno.com

www.houno.com

Part of MIDDLEBY