Heat On Demand 2 Plus
Induction Heating Activator

HOD250 – Heat On Demand 2 Plus



The prominent LED status light displays a different vibrant color at every stage.

- Small compact design
- Great for room service and late tray applications
- Consistent heat activation – each base is thoroughly and consistently heated the same each time
- Bases fit standard 9” / 230mm dishware and domes
- Meals can be held to desired temperature for up to 45 minutes
- 19 second heating cycle
- Uses 70% less electricity to heat each base when compared to conventional base heater
- Bases is safe to handle without gloves or base lifter
- Digital LED display
- Audible alert when base is ready

Standard Features

- Simple to operate
- Easy to clean
- Durable high impact, high temperature plastic
- Active heat source located inside the bottom of the base
- Insulation around enclosed heat source keeps heat within the pellet base
- Solid state electronic controls for enhanced reliability
- User friendly diagnostics for activator and base interface
- LED status light signals cycle change (white / idle; red / heating; green / ready; yellow / error).

Heat On Demand 2 Plus
Induction Heating Activator

HOD250 – Heat On Demand 2 Plus

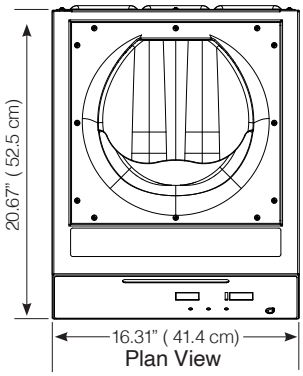

Plan View

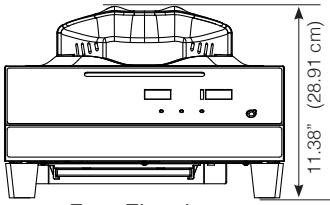

Front Elevation

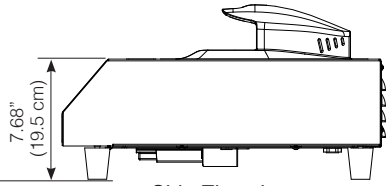

Side Elevation

SPECIFICATIONS

Dimensions

Width:	411mm
Height:	289mm
Depth:	525mm
Nett weight:	15.4kg
Packed weight:	22.2kg

Installation Requirements

For precise installation instructions please refer to the units installation manual

Electrical Supply

220-230V - 50/60Hz, 1P+N+E	
Rated power consumption (kW)	3.36
Rated Current (A)	14

moffat.com.au
moffat.co.nz

Australia
moffat.com.au

Moffat Pty Limited

Victoria/Tasmania
740 Springvale Road
Mulgrave, Victoria 3170
Telephone +613-9518 3888
Facsimile +613-9518 3833
vsales@moffat.com.au

New South Wales
Telephone +612-8833 4111
nswsales@moffat.com.au

South Australia
Telephone -613-9518 3888
vsales@moffat.com.au

Queensland
Telephone +617-3630 8600
qldsales@moffat.com.au

Western Australia
Telephone +61 8-9413 2400
wasales@moffat.com.au

New Zealand
moffat.co.nz

Moffat Limited

Rolleston
45 Illinois Drive
Izone Business Hub
Rolleston 7675
Telephone +64 3-983 6600
Facsimile +64 3-983 6660
sales@moffat.co.nz

Auckland
Telephone +64 9-574 3150
sales@moffat.co.nz

24:7 Service Support

ISO9001 Quality Management Standard

In line with policy to continually develop and improve its products, Moffat Limited reserves the right to change specifications and design without notice.

© Copyright Moffat Ltd

AN.ATR.SS.02.22