MULTI

ELECTRIC KETTLE - NON MIXING

GENERAL CHARACTERISTICS
- Nominal content: 150, 200, 250, 300 litres
- Kettle bowl in 316 acid resistant steel, all other parts in 304 stainless steel
- Full welded, insulated kettle body with etched volume markings
- Working pressure: 1,0 bar
- Max. steam temperature: 120° C
- Adjustable, vertical control box with IPX6 protection class
- Integrated isolator switch
- Pressure gauge
- Tilt height: Min. 400 mm from floor to bottom of pouring lip
- Unheated top for lower energy waste and better comfort
- Hinged easy open/close lid with gas-spring and ergonomic lid arm
- Lid made from stainless steel
- Safety device to prevent tilting with a closed lid
- Electric tilt with adjustable TiltBack
- Error codes for user errors and appliance faults
- Maximum temperature on the outside of the kettle bowl after 3 hours cooking: <40°C
- Working height: 900 mm
- Automatic filling of water into the steam generator
- Spray gun

CONTROL AUTO TEMP 32
- Electronic control of the jacket temperature
- Timer for cooking time/hour
- Clock
- Electronic water flow meter with drip-free spout
- Access code can be selected
- Two sets of arrow keys for fast, precise setting

OTHER OPTIONS
- Connection for Power-Management-System
- Drain valve/ Butterfly valve
- Rotatable lid

VARIANTS
- Can be built together with MultiMix, Opti and OptiMix
- Mounting pillar to the left



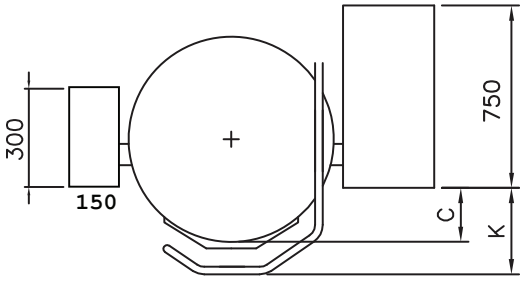

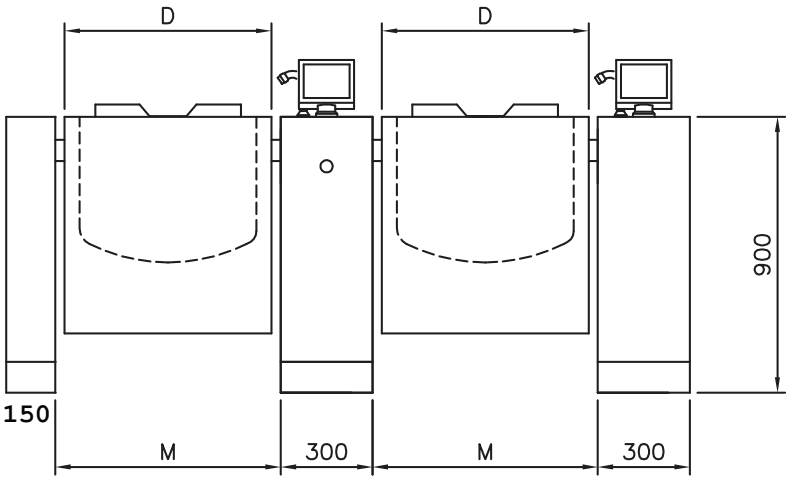

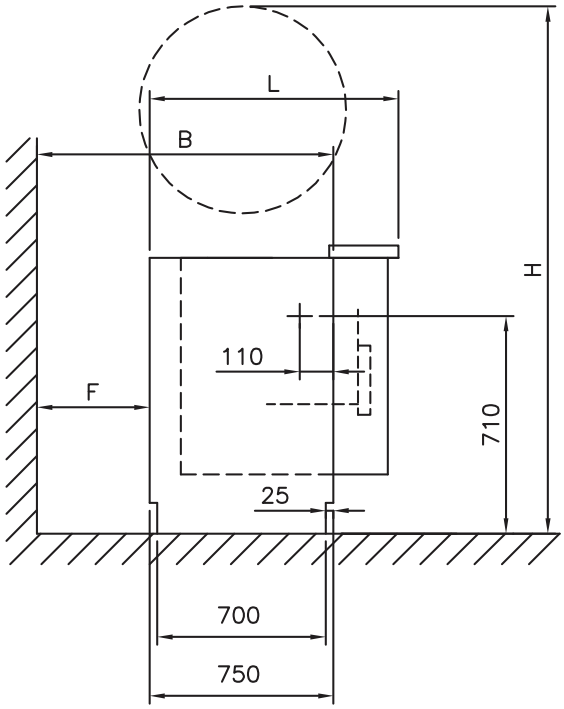

		Dimensions									Electric Version 3AC 400V 50Hz			Water	
Product Code	Type	C (mm)	D (mm)	F (mm)	H (mm)	K (mm)	L (mm) 550 pillar	M (mm)	Nom/brim volume (L)	Weight (kg)	Rated Power (kW)	Current consump-tion (A)	Time to boil 10-90°C (min)	COLD	HOT
AU104011	Multi 150	180	792	675	1950	325	950	852	150/169	365	30	3x43	28	1/2", 1.5-6 bar	1/2", 1.5-6 bar
AU104013	Multi 200	180	842	710	1982	325	950	902	200/222	392	30	3x43	38		
AU104015	Multi 250	180	940	775	2115	325	960	1000	250/278	490	45	3x65	31		
AU104017	Multi 300	180	1040	844	2194	325	1060	1100	300/334	584	45	3x65	38		

Dimensions for F and B vary by the size of the pillars and can be found in the technical data.

SPECIFICATIONS ARE SUBJECT TO CHANGE WITHOUT NOTICE. Drawing and mounting can not be made from these data alone. Further measurements, other voltages and connections and information about electrics, water, steam, compressed air and special conditions regarding leakage current is available in the complete technical data.