EASYMOBILE

ELECTRIC KETTLE ON CASTORS

GENERAL CHARACTERISTICS

- Nominal content: 40, 60, 80 or 100 litre
- Kettle bowl in 316 acid resistant steel, all other parts in 304 stainless steel
- Mobile underframe with two fixed castors and two castors with directional lock
- Full welded, insulated kettle body with etched volume markings
- Working pressure: 1,0 bar
- Max. steam temperature: 120° C
- Electrically heated
- Integrated isolator switch
- Pressure gauge
- Unheated top for lower energy waste and better comfort
- Hinged easy open/close lid with ergonomic lid arm
- Lid made from stainless steel
- Maximum temperature on the outside of the kettle bowl after 3 hours cooking: <40°C
- Working height: 950 mm
- Electrically heated kettles have automatic filling of water in the steam generator
- Spray gun

CONTROL AUTOTEMP 02

- Electronic heat control with turning knob
- Water filling into the kettle with cold water dispenser
- Automatic water filling into the steam generator when water level is low
- Indicator light for kettle in use
- Indicator light to indicate excessive pressure in the kettle / overheating of heating elements

OPTIONS

- Drain valve/ Butterfly valve
- Rotatable lid



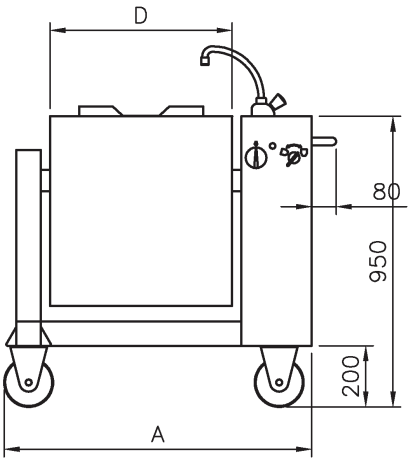

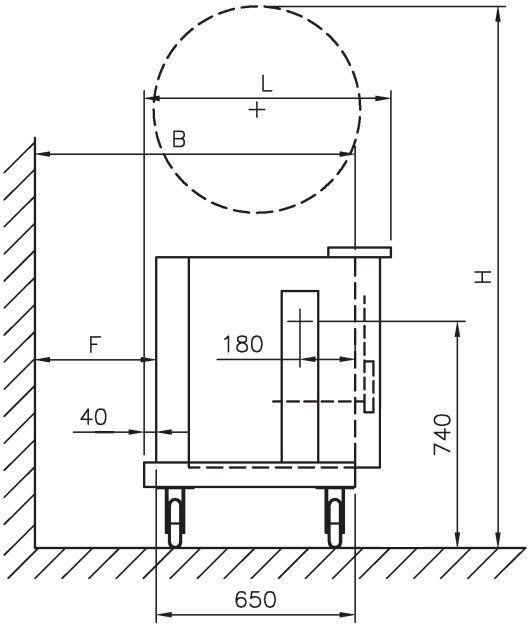

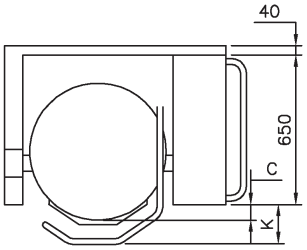

		Dimensions										Electric 3NAC 400V 50Hz			Water	
Product Code	Type	A (mm)	B (mm)	C (mm)	D (mm)	F (mm)	H (mm)	K (mm)	L (mm)	Nom/Brim volume (L)	Weight (kg)	Rated Power (kW)	Current consump-tion (A)	Time to boil 10-90°C (min)	COLD	HOT
AU112001	EasyMobile 40	956	750	43	546	100	1778	178	753	40/48	147	15	3x22	15	1/2", 1.5-6 bar	1/2", 1.5-6 bar
AU112002	EasyMobile 60	1005	774	68	595	124	1829	203	778	60/70	159	15	3x22	23		
AU112003	EasyMobile 80	1035	829	83	625	179	1850	218	793	80/91	170	15	3x22	30		
AU112004	EasyMobile 100	1085	860	108	675	210	1880	243	818	100/113	181	20	3x29	28		

SPECIFICATIONS ARE SUBJECT TO CHANGE WITHOUT NOTICE. Drawing and mounting can not be made from these data alone. Further measurements, other voltages and connections and information about electrics, water, steam, compressed air and special conditions regarding leakage current is available in the complete technical data.