MULTIMIX

ELECTRIC KETTLE WITH INTEGRATED STIRRER

GENERAL CHARACTERISTICS
- Nominal content: 40, 60, 80, 100, 120 litre
- Kettle bowl in 316 acid resistant steel, all other parts in 304 stainless steel
- Full welded, insulated kettle body with etched volume markings
- Working pressure: 1,0 bar
- Max. steam temperature: 120° C
- Adjustable, vertical control box with IPX6 protection class
- Integrated isolator switch
- Pressure gauge
- Tilt height : min. 400mm from floor to bottom of pouring lip
- Unheated top for lower energy waste and better comfort
- Hinged easy open/close lid with gas-spring and ergonomic lid arm
- Lid made from stainless steel, with inspection hole
- Safety device to prevent tilting with a closed lid
- Electric tilt with adjustable TiltBack
- Error codes for user errors and appliance faults
- Maximum temperature on the outside of the kettle bowl after 3 hours cooking: <40°C
- Working height: 900 mm
- Automatic filling of water in the steam generator
- Spray gun

VARIANTS
- Can be built together with Multi, MultiMix, Opti and OptiMix
- Mounting pillar to the left

STIRRER
- Fully integrated stainless steel stirrer
- Speed 5-155 rpm
- Easy removable scrapers made from synthetic food approved materials
- Slow acceleration/deceleration for improved safety
- Fast stopping of stirrer when lid is opened
- Stirrer is protected against overload
- Noise level in use: less then 55 dB

CONTROL AUTO TEMP 56
- Electronic control of the food temperature
- 9 dynamic heating power steps
- 7 dynamic stirring patterns with reversal and variable speeds
- 15 programs with storage of 10 sets of data. 7 of the programs require the chilling function to be selected
- Electronic water flow meter with drip-free spout
- Clock
- PowerMix
- WaterLevelAutomatic
- Access code can be selected
- Two sets of arrow keys for fast, precise setting

OPTIONS
- Automatic chilling using water from the mains supply
- Connection for Power-Management-Systems
- Temperature sensor collection of temperature data
- SlowMix with adjustable tilting speed
- Drain valve/ Butterfly valve
- Rotatable lid



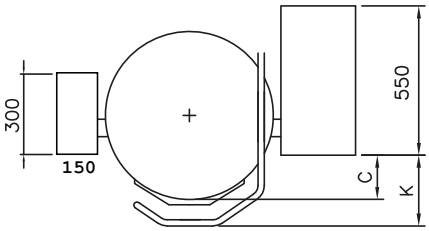

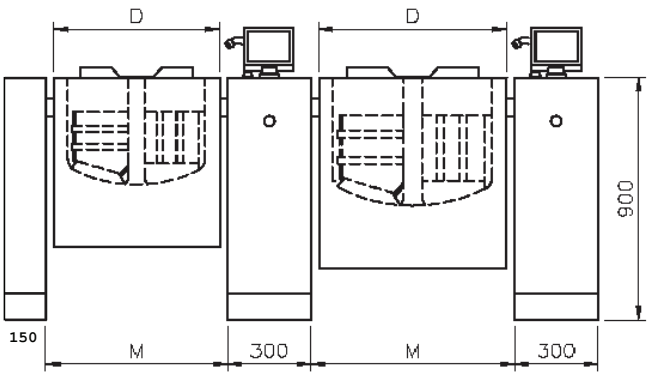

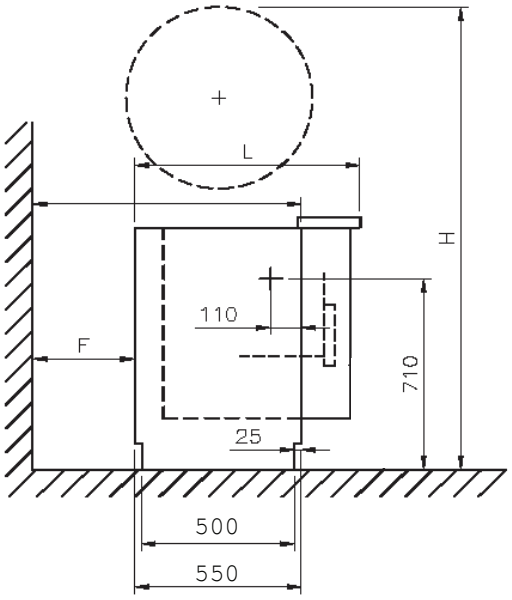

		Dimensions									Electric Version 3AC 400V 50Hz			Water	
Type	Type	C (mm)	D (mm)	H (mm)	K (mm)	L (mm) 550 pillar	M (mm)	F (mm)	Nom/brim volume (L)	Weight (kg)	Rated Power (kW)	Current consump-tion (A)	Approx. Time to boil 10-90°C (min)	COLD	HOT
AU105001	MultiMix 40	113	546	1750	248	683	606	475	40/48	227	16.1	3x26	15	1/2", 1.5-6 bar	1/2", 1.5-6 bar
AU105003	MultiMix 60	138	595	1784	273	708	655	475	60/70	251	16.1	3x26	23		
AU105005	MultiMix 80	153	625	1822	288	723	685	500	80/91	267	16.1	3x26	30		
AU105007	MultiMix 100	178	675	1849	313	748	735	531	100/113	282	21.1	3x33	28		
AU105009	MultiMix 120	178	675	1849	313	748	735	594	120/133	302	21.1	3x33	34		

Dimensions for F and B vary by the size of the pillars and can be found in the technical data.

SPECIFICATIONS ARE SUBJECT TO CHANGE WITHOUT NOTICE. Drawing and mounting can not be made from these data alone. Further measurements, other voltages and connections and information about electrics, water, steam, compressed air and special conditions regarding leakage current is available in the complete technical data.