MULTI

ELECTRIC KETTLE - NON MIXING

GENERAL CHARACTERISTICS
- Nominal content: 40, 60, 80, 100, 120 litres
- Kettle bowl in 316 acid resistant steel, all other parts in 304 stainless steel
- Full welded, insulated kettle body with etched volume markings
- Working pressure: 1,0 bar
- Max. steam temperature: 120° C
- Adjustable, vertical control box with IPX6 protection class
- Integrated isolator switch
- Pressure gauge
- Tilt height: Min. 400 mm from floor to bottom of pouring lip
- Unheated top for lower energy waste and better comfort
- Hinged easy open/close lid with gas-spring and ergonomic lid arm
- Lid made from stainless steel
- Safety device to prevent tilting with a closed lid
- Electric tilt with adjustable TiltBack
- Error codes for user errors and appliance faults
- Maximum temperature on the outside of the kettle bowl after 3 hours cooking: <40°C
- Working height: 900 mm
- Automatic filling of water into the steam generator
- Spray gun

CONTROL AUTO TEMP 32
- Electronic control of the jacket temperature
- Timer for cooking time/hour
- Clock
- Electronic water flow meter with drip-free spout
- Access code can be selected
- Two sets of arrow keys for fast, precise setting

OTHER OPTIONS
- Connection for Power-Management-System
- Drain valve/ Butterfly valve
- Rotatable lid

VARIANTS
- Can be built together with MultiMix, Opti and OptiMix
- Mounting pillar to the left



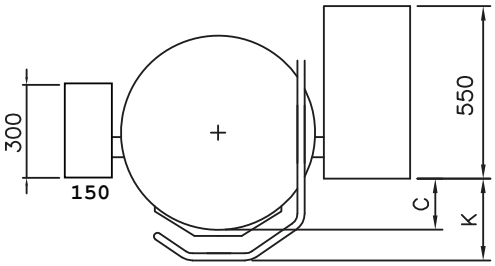

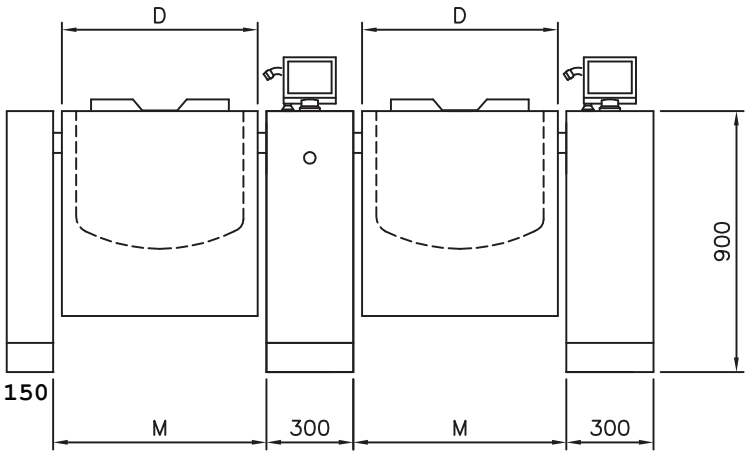

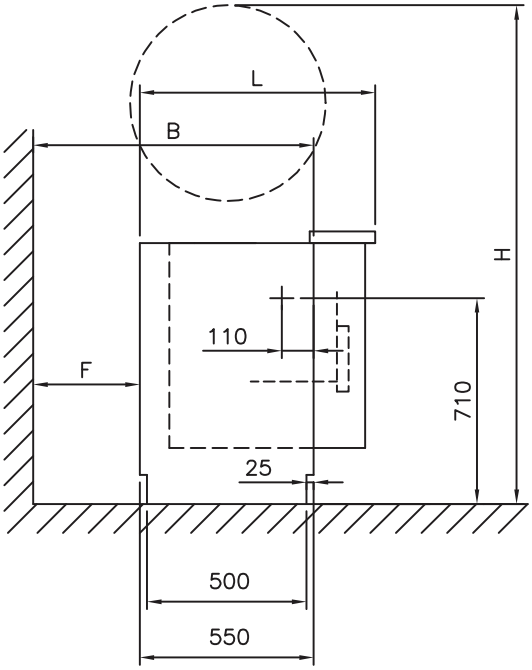

		Dimensions									Electric Version 3AC 400V 50Hz			Water	
Product Code	Type	C (mm)	D (mm)	F (mm)	H (mm)	K (mm)	L (mm) 550 pillar	M (mm)	Nom/brim volume (L)	Weight (kg)	Rated Power (kW)	Current consump-tion (A)	Time to boil 10-90°C (min)	COLD	HOT
AU104001	Multi 40	113	546	475	1750	248	683	606	40/48	202	15	3x22	15	1/2", 1.5-6 bar	1/2", 1.5-6 bar
AU104003	Multi 60	138	595	475	1784	273	708	655	60/70	224	15	3x22	23		
AU104005	Multi 80	153	625	500	1822	288	723	685	80/91	233	15	3x22	30		
AU104007	Multi 100	178	675	531	1849	313	748	735	100/113	242	20	3x29	28		
AU104009	Multi 120	178	675	594	1849	313	748	735	120/133	272	20	3x29	34		

Dimensions for F and B vary by the size of the pillars and can be found in the technical data.

SPECIFICATIONS ARE SUBJECT TO CHANGE WITHOUT NOTICE. Drawing and mounting can not be made from these data alone. Further measurements, other voltages and connections and information about electrics, water, steam, compressed air and special conditions regarding leakage current is available in the complete technical data.