OPTIMIX

ELECTRIC KETTLE WITH INTEGRATED STIRRER

GENERAL CHARACTERISTICS
- Nominal content: 40, 60, 80, 100, 120 litre
- Kettle bowl in 316 acid resistant steel, all other parts in 304 stainless steel
- Full welded, insulated kettle body with etched volume markings
- Working pressure: 1,0 bar
- Max. steam temperature: 120° C
- Adjustable, vertical control box with IPX6 protection class
- Integrated isolator switch
- Pressure gauge
- Tilting height : Min. 600 mm, floor to bottom of pouring lip
- Unheated top, lower energy waste and better comfort
- Hinged easy open/close lid with gas-spring and ergonomic lid arm
- Lid made from stainless steel with inspection hole and lid
- Safety device to prevent tilting with a closed lid
- Electric tilt with adjustable TiltBack
- Error codes for user errors and appliance faults
- Maximum temperature on the outside of the kettle bowl after 3 hours cooking: <40°C
- Working height: 900 mm.
- Automatic filling of water in the steam generator
- Spray gun

VARIANTS
- Can be built together with Multi, MultiMix and Opti
- Mounting pillar to the left

STIRRER
- Fully integrated stainless steel stirrer
- 5-155 rpm
- Easy removable scrapers made from synthetic food approved materials
- Scrapers stay in shape and scrape the heated area
- Slow acceleration/deceleration for improved safety
- Fast stopping of stirrer when lid is opened
- Stirrer is protected against overload
- Noise level in use: less then 55 dB



CONTROL AUTO TEMP 56
- Electronic control of the food temperature
- 9 dynamic heating power steps
- 7 dynamic stirring patterns with reversal and variable speeds
- 15 programs with storage of 10 sets of data. 7 of the programs require the chilling function to be selected
- Electronic water flow meter with drip-free spout
- Clock
- PowerMix
- WaterLevelAutomatic
- Access code can be selected
- Two sets of arrow keys for fast, precise setting

OTHER OPTIONS
- Connection for automatic chilling with water from the mains supply
- Connection for automatic chilling with recirculating chilled water plant
- Connection for Power-Management-System
- Temperature sensor collection of temperature data
- SlowMix with adjustable tilting speed
- Drain valve/ Butterfly valve
- Rotatable lid

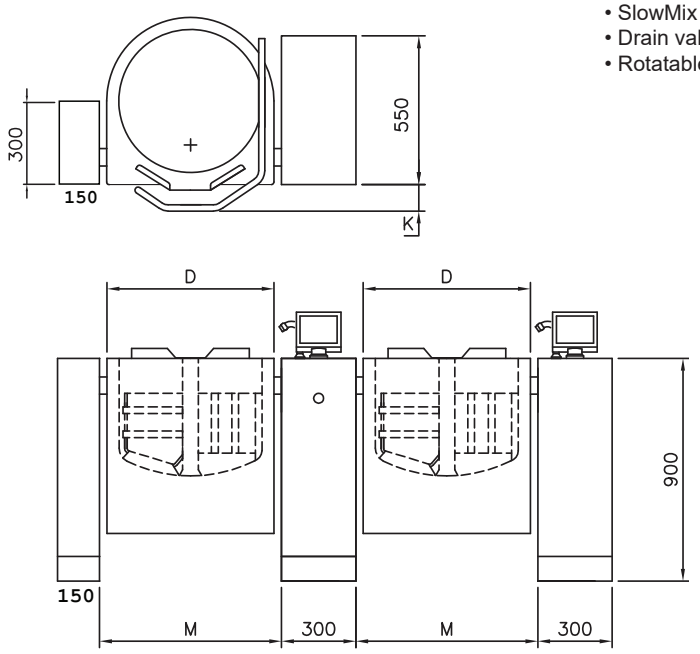

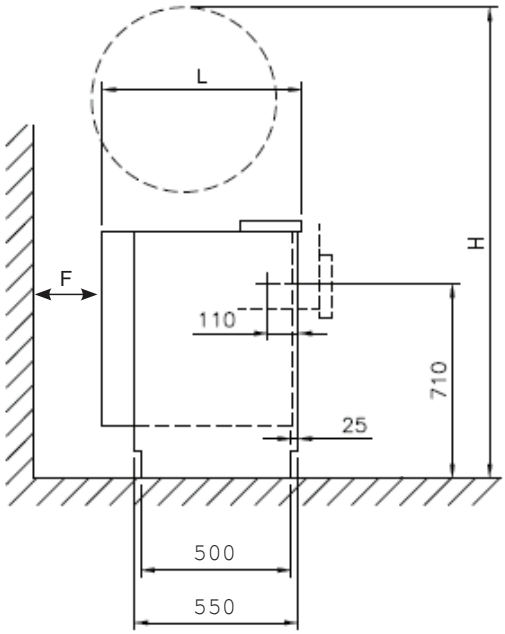

		Dimensions									Electric Version 3AC 400V 50Hz			Water	
Product Code	Type	C (mm)	D (mm)	H (mm)	K (mm)	L (mm) 550 pillar	M (mm)	F (mm)	Net/gross volume (L)	Weight (kg)	Rated Power (kW)	Current consump-tion (A)	Appprox time to boil 10-90°C (min)	COLD	HOT
AU102001	OptiMix 40	20	546	1715	115	586	646	493	40/48	225	16.1	3x26	15	1/2", 1.5-6 bar	1/2", 1.5-6 bar
AU102003	OptiMix 60	20	595	1739	115	635	695	569	60/70	248	16.1	3x26	23		
AU102005	OptiMix 80	20	625	1808	115	750	725	675	80/91	270	16.1	3x26	30		
AU102007	OptiMix 100	20	675	1828	115	750	775	681	100/113	287	21.1	3x33	28		
AU102009	OptiMix 120	20	675	1828	115	750	775	733	120/133	303	21.1	3x33	34		

Dimensions for F and B vary by the size of the pillars and can be found in the technical data.

SPECIFICATIONS ARE SUBJECT TO CHANGE WITHOUT NOTICE. Drawing and mounting can not be made from these data alone. Further measurements, other voltages and connections and information about electrics, water, steam, compressed air and special conditions regarding leakage current is available in the complete technical data.