AXR.URGN.2

Upright Refrigerator - 2 Door

Product Information:

- Monoblock refrigeration system, for improved performance and ease of servicing
- Adjustable digital temperature controller (0°C - 6°C)
- Vertically integrated ducted cooling throughout the entire refrigerator
- Protective coating on refrigeration coil to help prevent corrosion
- Environmentally friendly R290 Hydrocarbon refrigerant
- Efficient LED lighting for increased product visibility
- Five adjustable 2/1GN shelves supplied per door to maximise storage capacity
- 80mm CFC free polyurethane insulation
- Efficient and hygienic cleaning made easy with an innovative internal design
- High quality components including highly efficient compressors and EC fans
- Self-closing, lockable doors
- Supplied on heavy duty standard and lockable castors
- 1 door models available, with glass or solid doors

Designed and Engineered in Australia to meet Australian Standards

24 Months on-site parts and labour warranty



Optional Accessories:

- 2/1GN shelf with runners (AXR.URGN.SHELFKIT)

Specifications

Model	**AXR.URGN.2**
W x D x H (mm)	1400 x 850 x 1990
Weight	197kg
Packed Dimensions (mm)	1430 x 875 x 2040
Packed Weight	222kg
Net Capacity	814 Litres
Operation	0°C - 6°C
Refrigerant	R290
Climate Class	4
Max Ambient	40°C
Power	0.63kW 230VAC 10A plug & lead

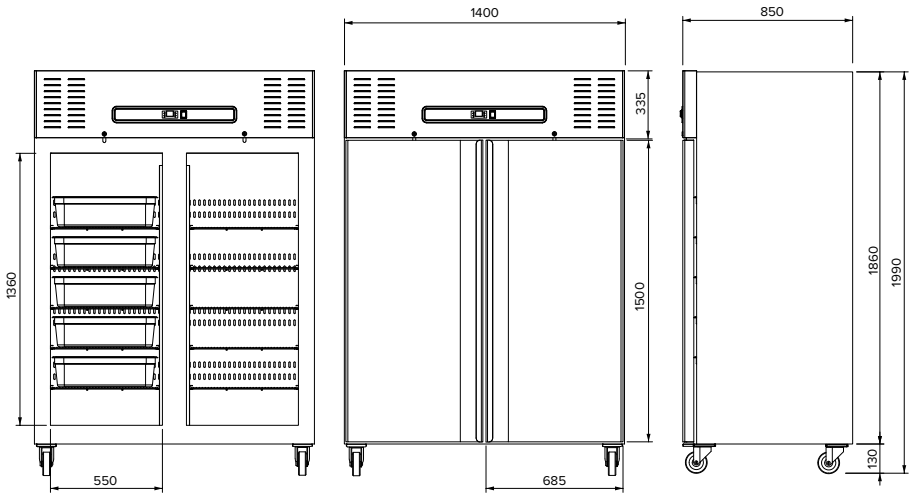

INSIDE VIEW FRONT VIEW SIDE VIEW

Due to continuous product research and development,
the information contained herein is subject to change without notice.

Revision: 02 - 23/07/2021 - A

www.stoddart.com.au
www.stoddart.co.nz

CHEFS DEPOT Culinary Supplies

STODDART®