Scotsman Ice Systems

CHEFS DEPOT Culinary Supplies

MOFFAT

HD Series Dispensing Units

HD 22



- 59kg storage bin capacity
- Simple ‘Push’ ice chute activates ice dispensing mechanism
- Removable top panel allows easy access to bin for routine cleaning
- Improved drop tray depth to accommodate most size of hotel ice buckets
- Polyurethane insulation for improved preservation of ice supply for longer periods
- Stainless steel cabinet
- Equipped with 3 meter cordset supplied
- Suitable for NW 308 and NW 508 ice maker head units

CE NSF

Scotsman®
Ice Systems

CHEFS DEPOT
Culinary Supplies

HD Series Dispensing Units
HD 22

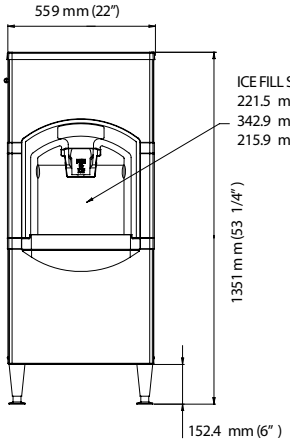

FRONT VIEW

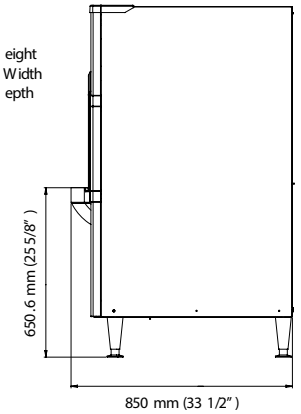

RIGHT SIDE VIEW

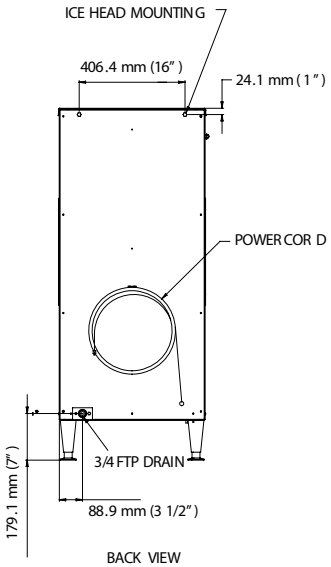

BACK VIEW

MOFFAT®
moffat.com.au

Australia
Moffat Pty Limited

Victoria/Tasmania
740 Springvale Road
Mulgrave, Victoria 3170
Telephone 03-9518 3888
Facsimile 03-9518 3833
vsales@moffat.com.au

New South Wales
Telephone 02-8833 4111
nswsales@moffat.com.au

South Australia
Telephone 03-9518 3888
vsales@moffat.com.au

Queensland
Telephone 07-3630 8600
qldsales@moffat.com.au

Western Australia
Telephone 08-9413 2400
wasales@moffat.com.au

Dimensions

Width:	559mm
Depth:	850mm
Height:	1351mm
Nett weight:	84kg
Packed weight:	91kg

Electrical rating
230-240V, 1P+N+E, 50Hz, 10A cordset supplied
No. Circuit wire: 3

Water connection requirements
Cold water: 5-38°C
Pressure: 100-500kPa
Water outlet connection: Ø¾"

Important Notice:
Models and specifications are subject to change without notice. This spec sheet is meant for commercial purpose only. For technical documentation please refer to our service manuals.

24:7 Service Support

© Copyright Moffat Ltd
AU.SM.1904