via Artigianato 85, Tel 030 265 04 88 - Fax 030 265 01 43
25030 Torbole Casaglia (BS) Italy www.sigmasrl.info
Email: info@sigmasrl.info

TECHNICAL SHEET

SPRIZZA 40-50

Cold system pizza spinner



Models:

- SPRIZZA 40
- SPRIZZA 50

General technical characteristics:

- Cold system for spreading the pizza dough;
- Patented micro-rolling system;
- Execution of the edge;
- Adjustable pizza thickness;
- Automatic start and stop;
- Capacity production 200-250 pcs/hr
- CE, ETL and EAC certification.

Optional accessories:

- Special tension.

Warranty:

- One year, ⊗

⊗ warranty conditions

Sigma machines are covered by warranty against material or manufacturing defects for 12 months since the invoice date and subject to the conditions here under mentioned:

The warranty consists only in the ex works replacement of the faulty parts, except the electrical parts and motors. The purchaser will be reimbursed neither for the damage coming from the production stop nor for the labor coming from the installation of the new parts. Warranty is not valid in the following cases: the purchaser does not respect the payment terms; the damages are caused by overcharge, unskilfulness, abnormal use, poor maintenance, not authorized modifications, when irregular or lack of of electric majeure. Manufacturing defects should be communicated to Sigma company to the e-mail address: sigmasrl.info@legalmail.it as soon as they appear.

via Artigianato 85, Tel 030 265 04 88 - Fax 030 265 01 43
25030 Torbole Casaglia (BS) Italy www.sigmasrl.info
Email: info@sigmasrl.info

Dimensions

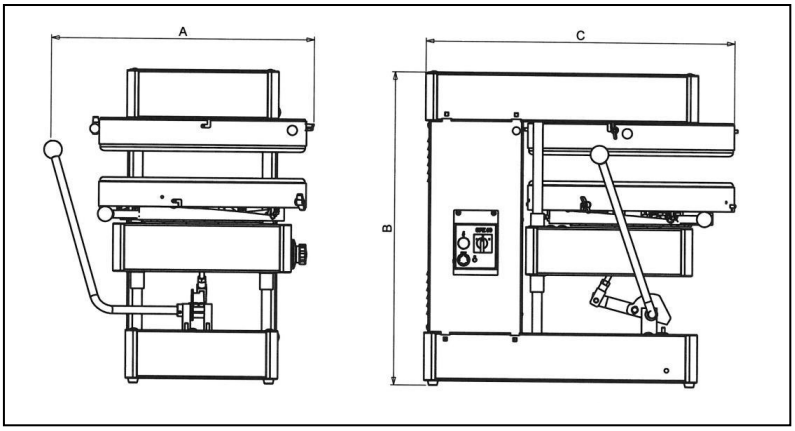

MODEL	A	B	C	Power [kW]	Φ Plate [mm]
SPZ 40	570mm (22'')	770mm (31'')	720mm (28'')	0.55	400 (16")
SPZ 50	700mm (27'')	840mm (33'')	820mm (32'')	0.75	500 (20")

Voltage:
SPZ 40-50: 230V/1/50Hz
(***Optional:*** special voltages)

Transmission: belts.

Protections: emergency button.

Control panel: the START & STOP is given by the approach/separation of the carpets by the lift lever.

Shipping information

Model	Net weight	Gross weight	
		Pallet	Cage
SPZ 40	120kg (264lb)	130kg (286lb)	170kg (374lb)
SPZ 50	150kg (330lb)	160kg (352lb)	200kg (440lb)

Information on the packaging

MODEL	Box on pallet		Cage/Crate	
	Dimensions [mm]	Volume [m^3]	Dimensions [mm]	Volume [m^3]
SPZ 40	750x900x1100 (29"x35"x43")	0.74 (26.2 ft^3)	980x830x1160 (38"x32"x45")	0.94 (33.2 ft^3)
SPZ 50	750x900x1100 (29"x35"x43")	0.74 (26.2 ft^3)	980x830x1160 (38"x32"x45")	0.94 (33.2 ft^3)

via Artigianato 85, Tel 030 265 04 88 - Fax 030 265 01 43
25030 Torbole Casaglia (BS) Italy www.sigmasrl.info
Email: info@sigmasrl.info

TECHNICAL SHEET

SPRIZZA AUTOMATIC
Cold system pizza spinner



Models:

- SPRIZZA AUTOMATIC

General technical characteristics:

- Cold system for spreading the pizza dough;
- Patented micro-rolling system;
- Execution of the edge;
- Adjustable pizza thickness;
- Automatic start and stop;
- Capacity production 200-250 pcs/hr
- CE, ETL and EAC certification.

Optional accessories:

- Special tension.

Warranty:

- One year, ⊗

⊗ warranty conditions

Sigma machines are covered by warranty against material or manufacturing defects for 12 months since the invoice date and subject to the conditions here under mentioned:

The warranty consists only in the ex works replacement of the faulty parts, except the electrical parts and motors. The purchaser will be reimbursed neither for the damage coming from the production stop nor for the labor coming from the installation of the new parts. Warranty is not valid in the following cases: the purchaser does not respect the payment terms; the damages are caused by overcharge, unskilfulness, abnormal use, poor maintenance, not authorized modifications, when irregular or lack of of electric majeure. Manufacturing defects should be communicated to Sigma company to the e-mail address: sigmasrl.info@legalmail.it as soon as they appear.

via Artigianato 85, Tel 030 265 04 88 - Fax 030 265 01 43
25030 Torbole Casaglia (BS) Italy www.sigmasrl.info
Email: info@sigmasrl.info

Dimensions

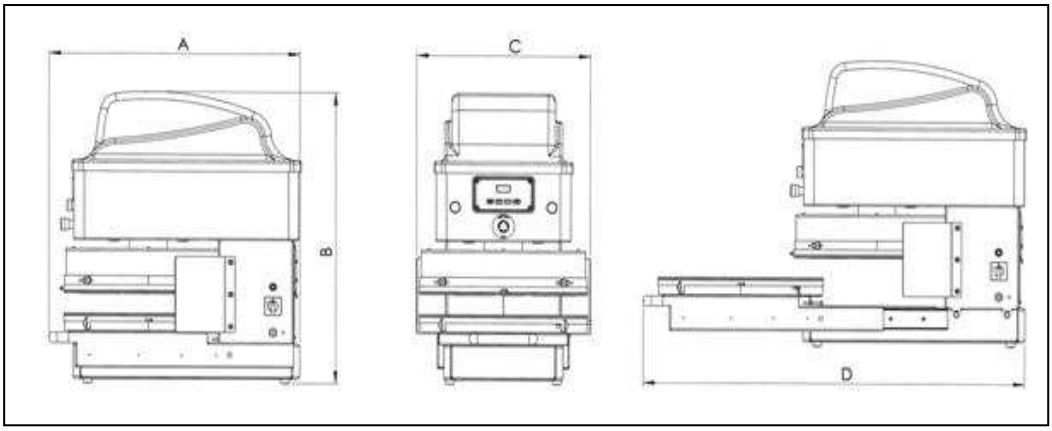

MODEL	A	B	C	D	Power [kW]	Φ Plate [mm]
SPZ AUTOMATICA	724mm (29'')	768mm (30'')	503mm (20'')	1124mm (44")	0.75	440 (17")

Voltage:
230-400V/1-3/50Hz
(***Optional:*** special voltages)

Transmission: belt.

Protections: emergency button.

Control panel: is positioned a display on the front of the machine , which serves to set the time and thickness . It has the ability to save 19 programs .

Shipping information

Model	Net weight	Gross weight	
		Pallet	Cage
SPZ AUTOMATIC	120kg (705lb)	130kg (286lb)	170kg (374lb)

Information on the packaging

MODEL	Box on pallet		Cage/Crate	
	Dimensions [mm]	Volume [m^3]	Dimensions [mm]	Volume [m^3]
SPZ AUTOMATIC	750x900x1100 (29"x35"x43")	0.74 (26.2 ft^3)	980x830x1160 (38"x32"x45")	0.94 (33.2 ft^3)