YCR 600mm Auto RR Steamer

Technical Specifications for YCR-1



CHEFS DEPOT
Culinary Supplies

ASIAN

- Ideal for high volume rice roll (cheung Fun) steaming
- Incredible 800mm space saving depth
- Powerful mongolian burner for maximum steam output
- Internal heat exchanger for maximum efficiency
- Automatic water refill mechanism for easy operation
- Stainless steel lid and perforated aluminium plate
- Durable Zinc-aluminium Alloy burner handle
- 304 grade high quality stainless steel panels
- Interchangeable Yum Cha attachment (optional extra)
- 24 month 'Platinum Warranty'
- Easy to clean and service

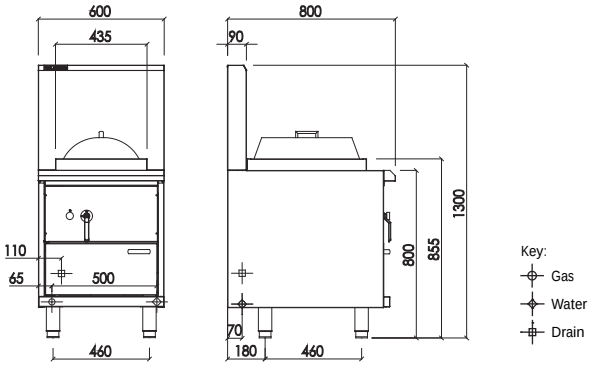

Compact Auto-Refill Rice Roll Steamer
- 123 mj 32 jet mongolian burner with piezo, pilot & FFD
- In-built auto-refill mechanism with stainless steel float
- Four internal 304 stainless steel heat exchange tubes
- 1.5mm 304 stainless steel water tank
- 3mm aluminum perforated steam plate
- 0.9mm 304 stainless steel lid
- Front gutter design for easier cleaning
- Zinc-aluminium Alloy burner handles

Overall Construction
- Heavy duty construction
- 1.5mm 304 stainless steel deck
- Splashback 1.2 mm 304 stainless steel
- Front cover, door and hob 1.2mm 304 stainless steel
- Side panels 0.9mm 304 stainless steel
- Stainless steel legs with 55mm height adjustment range

Dimensions
- 600mm x 800mm x 1300mm H
- Working height 855mm
- Weight 95kg
- Packed dimensions 650mm x 900mm x 1470mm H
- Packed weight 115kg

Connections
- Gas 3/4" BSP male
- Gas 65mm from left, 70mm from rear, 160mm to floor
- Supplied with gas regulator (specify Nat or LP on order)
- Water inlet 1/2" copper tube
- Water 35mm from right, 70mm from rear, 160mm to floor
- Drain 1 3/4" tube
- Drain 110mm from left, 70mm from rear, 305mm to floor

Cleaning & Servicing
- Easy access to all parts & components from front

Options/Accessories
- 250mm and 500mm wide clip on shelves (front)
- Yum cha skirt and steam plate attachment
- Joining caps & strips
- RH and LH side shields
- Rear castors

Model	Description	Nat Gas	LP Gas
YCR-1	1 mongolian burner steamer	123 mj	123 mj

Luus Industries Pty Ltd | (03) 9240 6822 | sales@luus.com.au | www.luus.com.au

AUSTRALIAN MADE AND OWNED

24 MONTHS PLATINUM WARRANTY

AGA